REMEDIAL ACTION PLAN

Jordan Valley West Meadows Site #1

725 W. Olive Street

Springfield, Greene County, Missouri

March 11, 2010

Terracon Project No. B5097016A

Contract No. 2009-0982

Brownfields Cleanup Grant Project

United States Environmental Protection Agency – Region 7

EPA Cooperative Agreement BF-98796601-0

City of Springfield, Missouri

Prepared for:

City of Springfield, Missouri

Brownfield Program

Prepared by:

Terracon Consultants, Inc.

Lenexa, Kansas

Offices Nationwide Established in 1965
Employee-Owned terracon.com

Terracon

Geotechnical ■ Environmental ■ Construction Materials ■ Facilities

1.0 SIGNATURES AND APPROVALS PAGE

REMEDIAL ACTION PLAN
FOR
JORDAN VALLEY WEST MEADOWS SITE #1
725 WEST OLIVE STREET
SPRINGFIELD, GREENE COUNTY, MISSOURI

March 11, 2010

Brownfields Cleanup Grant Project
United States Environmental Protection Agency – Region 7
EPA Cooperative Agreement BF-98796601-0

Contract No. 2009-0982
Terracon No. B5097016A

APPROVALS:

	3/31/10
Terracon Project Manager – Eric J. Gorman	Date
Ashley D Stuchr. Sr	3/31/10
Terracon Quality Assurance Reviewer – Dave Koch	Date
	3-31-10
City of Springfield Brownfields Coordinator – Olivia Hough	Date
	3-31-10
City of Springfield Environmental Engineer – Doug Durrington	Date
EPA Brownfields Project Officer – Alma Moreno Lahm	Date
MDNR Brownfields/VCP Project Manager – Chris Cady	Date

TABLE OF CONTENTS

1.0 SIGNATURES AND APPROVALS PAGE 1

PREAMBLE I

2.0 INTRODUCTION 1

2.1 Site Location and Description 2

2.2 Site History 2

2.3 Previous Report Findings 2

2.3.1 Previous Assessments 2
2.3.2 Recent Characterization for Remedial Design 3

2.4 Project Organization 4

2.4.1 Responsible Agency 4
2.4.2 Project Personnel and Schedule 4
2.4.3 Project Personnel and Schedule 5

3.0 PROJECT OBJECTIVES AND CLEANUP RATIONAL 6

3.1 Problem Definition and Sampling Objective 7

3.2 Project Decision 8

4.0 PROJECT QUALITY OBJECTIVES 8

4.1 Review and Approval Assistance 8

4.2 Adoption of State Quality Assurance Project Plan 8

4.2.1 Authority For Use 9
4.2.2 Equivalency of Program Terms 9

4.3 Data Quality Objectives (DQOs) 9

4.4 Data Quality Indicators (DQIs) 10

5.0 SITE CONCEPTUAL MODEL 10

5.1 Nature of Impact 11

5.2 Area of Impact 12

6.0 REMEDIAL ACTION TASKS 13

6.1 General Excavation Methods 13

TABLE OF CONTENTS (cont.)

6.2 Soil Management 14

6.2.1 Disposal Characterization 15
6.2.2 Non-Hazardous Disposal 15
6.2.3 Hazardous Waste Generation and Disposal 16

6.3 Concrete Removal 16

6.4 Site Restoration 16

7.0 CONFIRMATION SAMPLING AND LABORATORY ANALYSIS 16

7.1 Confirmation Sampling Strategy, XRF Field Analysis, and Rationale 17

7.2 Sample Collection and Handling 18

7.2.1 Soil Grab Samples 19
7.2.2 Water Blank Samples 19

7.3 Laboratory Methods 19

7.4 Sample Submission Criteria 20

7.4.1 Soil Grab Samples 20
7.4.2 Quality Control Samples 21
7.4.3 General Contingencies 21

7.5 Decontamination and Investigative Wastes 21

7.5.1 Cleaning Procedures 21
7.5.2 Investigative Derived Waste 21

7.6 Field Documentation 22

7.6.1 Project Remedial Action Plan 22
7.6.2 Field Logbook 22
7.6.3 Photo-Documentation 23
7.6.4 Soil Sampling Locations and Measurements 23

8.0 QUALITY CONTROL 23

8.1 XRF Calibration And Quality Control 24

9.0 PROJECT SAFETY AND TRAINING 25

9.1 Special Training Requirements / Certification 25

9.2 Health and Safety Plan 25

9.3 Utility Clearance 25

9.4 Excavation Area 25

10.0 PROJECT REPORTING 26

TABLE OF CONTENTS (cont.)

11.0 ASSUMPTIONS AND WORK PLAN DEVIATIONS 26

12.0 REFERENCES 26

APPENDIX A – Figures

Figure 1 Site Location and Topographic Map
Figure 2 Jordan Valley West Meadow's Survey Map
Figure 3 Site #1 Survey Map
Figure 4 Previous Sample Location Map
Figure 5 Excavation Diagram

APPENDIX B – Site Specific Data Summary Tables

APPENDIX C – Missouri Department of Natural Resources Quality Assurance Project Plan for Brownfields/Voluntary Cleanup Program Sites (QAPP)

APPENDIX D – Site-Specific Quality Assurance Addendum to MDNR QAPP

APPENDIX E – Terracon Standard Operating Procedures (SOPs)

APPENDIX F – Environmental Science Corporation Laboratory Quality Assurance Program Manual on Compact Disk

APPENDIX G – Site-Specific Health and Safety Plan

PREAMBLE

The Jordan Valley West Meadows area is a designated Brownfields area undergoing restoration in Springfield, Missouri. Environmental cleanup is occurring to bring this area back to a higher and better use for the citizens of Springfield. Brownfields restoration is engaging the public and multiple agencies' resources to sustainably reclaim West Meadows. This includes both short- and long-term projects for rail corridor relocation and flood control improvements. Project studies show single event 100-year flood damages of $33,000,000 occur, with 55% in the lower Jordan area that includes West Meadows. Annualized high water and lesser flood event damages of $4,700,000 occur. Land within the city limits and Jordan Creek drainage available for large scale flood control improvements capable of significant positive impacts are extremely limited.

The West Meadows area presents a unique opportunity to combine flood control relief, sustainable greenhouse gas-friendly environmental cleanup, Brownfields restoration to support economic redevelopment and improved green space area for the community. The West Meadows project has progressed to this design stage for environmental cleanup of residual contaminants using a combination of funding from the United States Environmental Protection Agency (EPA) Brownfields Program, the American Reinvestment and Recovery Act and the City of Springfield.

The West Meadows area occupies approximately 16 acres of commercial and heavy industrial land paralleling Jordan Creek in central Springfield. The parcel contains an existing railroad corridor and the drainage of Jordan Valley Creek. The area is bounded on the east by North Fort Avenue North Grant Avenue to the west, lying between West Phelps Street to the north and West College Street to the south. The West Meadows area is present with eight individually platted properties designated as Site #1 through Site #8 (reference Figure 2) owned by the City.

The final cleanup, and the protection and benefits it will provide, must address the entire West Meadows to be most effective. Although a comprehensive solution is intended long-term, cleanup must occur in stages due to sequenced availability of funding. This requires that a process of remedial design and cleanup occur on individual sites. As cleanup progresses with funding, activities of all Sites must be coordinated with the overall objectives for West Meadows. Each of the eight sites' remedial designs and subsequent cleanups must fit integrally with the comprehensive remedial solution whether they occur simultaneously or not. The process to design and accomplish this has engaged the State of Missouri's Department of Natural Resources' Brownfield / Voluntary Cleanup Program and other public and non-profit groups.

Although residual contaminants exist in soils and fills in West Meadows, no condition of imminent threat to public health or environment has been identified. The measured concentrations of COCs lend themselves to a risk-based corrective action solution in

combination with on-site soil management and land use controls. Post-remedy, the West Meadows area will remain under the ownership and management of the City of Springfield.

Previous and on-going outreach has engaged the community relative to West Meadows as the City of Springfield implements a combined community relations process for all eight sites. In February 2010, the City Council adopted the *Jordan Valley and Jordan Valley Park Concept Plan and Guidelines* an amendment to the *Vision 20/20 Springfield Greene County Comprehensive Plan* that ultimately ties to the vision for Jordan Valley to the West Meadows area. Based on this outreach and regional planning, the future land use of West Meadows (Site #1 through Site #8) will include open/green space designs and greenway trail for public use with native plants to stabilize soils and filter surface water. The City has partnered with Ozark Greenways for trail development.

Historical flooding in the central part of the City has created a secondary future use need for additional stormwater capacity via surface drainage improvements and stormwater detention. The City along with the US Army Corps of Engineers is currently completing regional stormwater studies and planning for future improvements. Such improvements would likely require alteration of existing surface drainage patterns. West Meadows' location along Jordan Creek within the 100-year flood plain is an ideal candidate for stormwater improvements that develop additional floodwater retention and detention capacities.

Sites #1 through #8 have been previously assessed through previous Brownfields Phase I and Phase II Environmental Site Assessments under EPA Brownfield Assessment Grants and through Targeted Brownfield Assessments. Based on the findings, each of these eight sites (Site #1 through Site #8) is present with similar contaminants of concern (COCs) including metals and polycyclic aromatic hydrocarbons (PAHs). The primary COCs include lead, arsenic, and benzo(a)pyrene.

Lead, arsenic, and PAH impacts to soil appear to be commingled within the same general areas. Increased concentrations and potential source areas are more prevalent in the central and west-central portions of West Meadows. These locations are consistent with various potential sources related to historical rail yard operations. Surface, near surface, and subsurface soil impacts were identified at various depths and correlate well with documented areas of fill and debris associated with industrial fills and grade modifications since 1865.

Assessment documented the presence of several thick mounds of concrete as waste concrete, rubble and foundations on the western portion of West Meadows. The massive mounds were created by years of washout of concrete trucks on the site. The nature of waste concrete and washout residues make the material unsuitable for recycling. Due to the quantity and makeup of the concrete material, Remedial Action Cost Engineering and Requirements System (RACER) studies identified it is not financially feasible to remove

within the limits of public funding available to the project...

A Tiered Risk Assessment under Missouri Risk-Based Corrective Action (RBCA) technical guidance was completed that included all eight Sites. The risk assessment was completed to fully assess future land use and potential exposure pathways (e.g. dermal contact, ingestion, etc.). This process further defined cleanup standards applicable to the Sites to allow for detailed cleanup planning based on fixed remediation objectives.

During the cleanup planning process the City and an environmental consultant coordinated with Kansas State University who developed a conceptual landscape plan. This landscape plan incorporates the post cleanup grading of the site and provides planting guidance and guidelines for post-remedy stabilization and control of ground surface areas and pocket wetland areas.

Each of the eight sites has been individually enrolled in the MDNR's B/VCP and will be closed individually under individual remedial action plans. The general West Meadows cleanup concept is to:

- Excavate impacted soils associated with historical fill present on the eastern portion of West Meadows (Site #1 through Site #5) creating additional stormwater capacity within the 100-year flood plain;
- Leave in place soils with COC concentrations that do not pose unacceptable chemical risk; and
- Control and manage excavated soils on the western portion of West Meadows (Site #5 through Site #8) over the concrete debris and at elevations primarily above the 100-year floodplain as possible.

This concept further:

- Reduces the amount of soils transported out of the West Meadows area but within West Meadows, thereby reducing the greenhouse gas effects of traditional "dig-and-haul" approaches while preserving funding for use in additional soil excavation from the eastern Sites to complete cleanup and provide expanded flood detention capacity;
- Allows for creation of a pocketed wetland/stormwater detention area on the eastern Sites;
- Places soils with lower COC concentrations over soils with higher COC concentration soils which were present on the western portion of the Sites and can remain in place;
- Covers or incorporates the concrete debris on the western Sites; and
- Allows for vegetation and stabilization of the entire West Meadows area meeting the community's need for open green space and stormwater improvements while being environmentally protective.

The following Remedial Action Plan specifically identifies the remedial action and sampling procedures for an individual Site, but planning was completed taking into consideration of the West Meadows area as a whole.

2.0 INTRODUCTION

The United States Environmental Protection Agency (EPA) selected the City of Springfield, Missouri (City) for a Brownfields Cleanup Grant to address hazardous substances with petroleum as contaminants at Jordan Valley West Meadows Site #1 (West Meadows Site #1). The EPA and City have negotiated Cooperative Agreement EPA #BF-98796601-0 governing grant activity. West Meadows Site #1 is the first of eight parcels in the Jordan Valley Corridor West Meadows area scheduled for sequential cleanup by the City. The City will use grant funds to conduct remediation design and cleanup to restore the target property for community reuse. This Remedial Action Plan (RAP) describes activities conducted under Task 3- Cleanup Planning of the Cooperative Agreement Work Plan.

West Meadows Site #1 consists of the property commonly known as the Champieux Property, portions of the BNSF Tract 1 Property, and portions of the Tract 2 Union Pacific Railroad Company (U.P.) Property. Previous Brownfields Phase I and Phase II Environmental Site Assessments have occurred under EPA Brownfield Assessment Grants and Targeted Brownfield Assessment at these properties. Assessments completed for the City of Springfield were conducted using EPA-approved Quality Assurance Project Plan and Technical Sampling and Analysis Plans.

Phase II assessment reports completed for the City of Springfield by Terracon included cleanup preliminary planning and cost-to-remedy evaluations for Analysis of Brownfield Cleanup Alternatives (ABCA) of each subparcel prior to acquisition by City. Involving both hazardous substances and co-mingled petroleum compounds, the ABCA discussions evaluated multiple land use and technology scenarios. In assembling the eight parcels in the West Meadows area, including Site #1, data from property-specific assessments was compiled to evaluate the eight assembled parcels for more detailed cleanup planning. The compiled findings and final cleanup selection involved community engagement and continued Outreach with multiple stakeholders, including private citizens, state and federal regulatory agencies and the business community.

Most recently, Terracon completed characterization for remedial design to refine the ABCA data used to estimate extent and quantities of materials requiring treatment and/or disposal as part of remediation design.

West Meadows Site #1 is enrolled site in the Missouri Department of Natural Resources' (MDNR) Brownfields/Voluntary Cleanup Program (B/VCP) and a Project Manager, Chris Cady, assigned. Consistent with prior EPA Project Officer approval, this Technical Work Plan incorporates the MDNR B/VCP Quality Assurance Project Plan, compliant with quality assurance/control requirements of the grantee's Cooperative Agreement.

In accordance with EPA Brownfields Grant requirements, this Remedial Action Plan implements a quality process of quality assurance and quality control (QA/QC) protocols consistent with *EPA Requirements for Quality Assurance Project Plans – EPA QA/R-5*.

The following sections outline proposed field, laboratory, and associated quality control procedures in detail.

2.1 Site Location and Description

The subject site is located in central Springfield, Missouri. The site, known as West Meadows Site #1, is present under the N. Grant Avenue viaduct and extends just east and west of the viaduct south of Jordan Creek and north of the MNA rail line. The Brownfields Grant Application provided by the City lists the site as 725 W. Olive Street. Figure 1 of Appendix A provides a topographic map illustrating the general location.

The subject site occupies approximately 1.5 acres of primarily commercial and light industrial land. The site is currently unoccupied with a small warehouse building, utilized by the City of Springfield Police department, located along the northwestern portion of the site. The Grant Avenue viaduct is constructed over the central portion of the site.

Adjoining properties generally include the following:

- North – Jordan Creek
- South – Railroad properties
- East – Commercial and industrial facilities
- West – Railroad properties

Additional areas surrounding the site generally consist of primarily commercial and light industrial land use. Figure 2 of Appendix A provides a survey map of Jordan Valley West Meadow's Site #1 through Site #8. Figure 3 provides a survey map of Site #1.

2.2 Site History

Available records suggest portions of the site and surrounding land has always consisted of the Frisco and now BNSF rail yards including several warehouses. The Site was historically part of a larger parcel that was used as a freight depot and warehouse by the St. Louis and San Francisco Railway Company from the late 1800s to the 1980s. More detailed site history is discussed in the previous reports listed in Section 2.3.

2.3 Previous Report Findings

2.3.1 Previous Assessments

West Meadows Site #1 consists of the property previously referenced as the Champieux Property, portions of the BNSF Tract 1 Property, and portions of the Tract 2 Union Pacific Railroad Company (U.P.) Property. Below is a summary for the previous assessment reports related to Site #1. These reports were previously summarized in detail within the Tier 1 Risk Assessment and Characterization for Remedial Design Reports.

<u>Champieux Property</u>

- Phase I Environmental Site Assessment (ESA) for the Property at 725 W. Olive in Springfield, Missouri completed by Midwest Environmental Consultants (MEC).

- Phase II ESA for Champieux Property completed by Terracon Consultants, Inc., 2005.

Tract 2: U.P. Property

- Phase I and Phase II Environmental Site Assessments completed by Environmental Works, Inc. (EWI), 2004.
- Phase II ESA Tract 2: U.P. Property completed by Terracon, 2005.

Tract 1: BNSF Property

- Phase I and Phase II Environmental Site Assessments for Tract 1: BNSF Property completed by EWI, 2004.
- Phase II Brownfields Targeted Assessment for the Springfield Former Manufactured Gas Plant completed by Project Resources Inc., 2005.

Tracts 1 and 2

- Limited Missouri Risk-Based Corrective Action (MRBCA) Tier 1 Evaluation completed by Terracon, 2006.

West Meadows Site #1

- MRBCA Tier 1 Report for West Meadows Site 1 completed by Terracon, 2009.

2.3.2 Recent Characterization for Remedial Design

Terracon recently completed the Brownfields Characterization for Remedial Design for Jordan Valley West Meadows Site #1 (Terracon Project Number 02087047) in February 2010 to obtain additional data needed for the development and implementation of this Remedial Action Plan (RAP).

Two grab soil samples (G-1 and G-2) were collected from the previous sampling locations SS-3 and SS-17 to evaluate the previous mercury X-ray fluorescence (XRF) detections. Laboratory analytical results of the soil samples G-1 and G-2 indicated mercury was not detected above the residential Tier 1 MRBCA Tier 1 Risk-Based Target Levels (RBTLs).

Seven grab soil samples (G-1 through G-9) were collected on the south portion of the site to obtain data on that area of the site. Laboratory analytical results of the grab soil samples G-6, G-7, and G-8 indicated that arsenic, cadmium, lead, and mercury were detected above the laboratory analytical detection limit but below the default target levels (DTLs). Laboratory analytical results of the grab soil samples G-3, G-4, G-5, and G-9 indicated concentrations of arsenic, cadmium, lead, and mercury above the detection limits and with at least one analyte above the DTL and residential Tier 1 RBTL and non-residential Tier 1 RBTL.

Laboratory analytical results of the composite soil samples indicated that the Toxicity Characteristic Leaching Procedure (TCLP) mercury and TCLP arsenic were not detected above the laboratory detection limits. TCLP cadmium was either not detected above the laboratory detection limit or below the maximum concentration of contaminant for the toxicity

characteristic. TCLP lead was detected at concentrations above the laboratory detection limits but below the maximum concentration. Based on the TCLP data, the soils are characterized as non-hazardous waste and do not have to be handled as hazardous materials.

2.4 Project Organization

2.4.1 Responsible Agency

The West Meadows Site #1 property has been approved by EPA for remedial action under the City's Brownfields Cleanup Grant. The MDNR is providing the primary technical review as the site is currently enrolled in the MDNR B/VCP program.

2.4.2 Project Personnel and Schedule

Persons involved at this Site and their roles and/or responsibilities are included in Table 1 below. Table 2 below outlines the tentative project schedule.

Table 1. Project Personnel

Title	Name	Responsibilities	Phone Number
City of Springfield Brownfields Coordinator	Olivia Hough	General grant project coordination and management; EPA, Terracon, and landowner contact; financial oversight and budget approvals; scope development; report reviews	417-864-1092
City of Springfield Environmental Engineer	Doug Durrington	General grant project technical oversight and management; financial oversight and budget approvals; scope development; report reviews	417-864-2004
EPA Project Officer	Alma Moreno Lahm	General project coordination and programmatic oversight, technical reviews, and technical work plan approval	913-551-7380
MDNR B/VCP Project Manager	Chris Cady	General project coordination and programmatic oversight, technical reviews, and approval	573-526-8916
Terracon Project Manager	Eric Gorman	General project oversight and management; EPA and Client contact; scope and Remedial Action Plan development and implementation; field oversight, data validation; report development	913-492-7777
Terracon Field Supervisor	Ashley Stuerke or Field Representative	Field implementation of the Remedial Action Plan; field quality control and documentation; subcontractor administration	913-231-5172
Terracon Site Health and Safety Officer	Ashley Stuerke or Field Representative	Health and Safety Plan (HASP) development; utility locates; project safety briefings; field implementation of HASP	913-231-5172
Terracon Quality Assurance Reviewers	Eric Gorman / Dave Koch	Internal project audits; data validation; draft report reviews	913-492-7777
Subcontractor Personnel			
Analytical Laboratory – Environmental Science Corporation	Eric Johnson, QA/QC	Laboratory analytical procedures and reporting; laboratory quality control	615-758-5858
Remediation Contractor	--	To be determined based on competitive bid process by the City of Springfield	--

Table 2. Proposed Project Schedule

Task	Anticipated Completion Timeline
MDNR & EPA Review, Remedial Action Plan Revision, and EPA Approval	Determined by Agency
Field Activities Completed	Within 60 days of RAP approval and selection of remedial contractor
Laboratory Work Completed	Within 30 days of completion of field activities
Submission of Draft Report	Within 45 days of completion of field activities
Report Review, Revision, and Submission of Final Report	Within 10 days or City approval of draft report

2.4.3 Project Personnel and Schedule

Copies of the final Remedial Action Plan and Remedial Action Report will be distributed as indicated below.

Missouri Department of Natural Resources
Brownfields / Voluntary Cleanup Program
P.O. Box 176
1738 E. Elm Street
Jefferson City, Missouri 65102
Attn: Mr. Chris Cady
One hard copy and electronic copy

U.S. Environmental Protection Agency
Region 7 Brownfields Program
901 North 5th Street, SUPR/STAR
Kansas City, KS 66101
Attn: Ms. Alma Moreno Lahm
One hard copy and electronic copy

City of Springfield
Department of Planning and Development
840 Boonville Avenue
Springfield, MO 65801
Attn: Ms. Olivia Hough and/or Doug Durrington
Two hard copies and electronic copy

Terracon Consultants, Inc. – File / Project Manager
13910 W. 96th Terrace
Lenexa, Kansas 66215
Project File 02057099
Attn: Mr. Eric Gorman
One hard copy and electronic copy

Terracon Consultants, Inc. – Quality Assurance Reviewer
13910 West 96th Terrace
Lenexa, Kansas 66215
Attn: Dave Koch
One electronic copy (on shared network)

3.0 PROJECT OBJECTIVES AND CLEANUP RATIONAL

The purpose of this Remedial Action Plan is to outline the specific field, laboratory, and quality control procedures that will be applied to address impacts to surface soil, near surface soil, and fill materials to ensure generation of data usable for final determinations regarding post-removal site conditions and subsequent response action. Through these specific efforts, B/VCP cleanup requirements will also be addressed in a manner that allows for No Further Action (NFA) consideration by the MDNR.

Further, this RAP is to provide quantitative and definitive-level data through intrusive sampling, field screening, and certified laboratory testing following specific QA/QC procedures. Associated field and laboratory methods are summarized in the following:

- Complete oversight and documentation of soil excavation activities.
- Collection of excavation field screening and closure samples for XRF analyses following the initial excavations.
- Laboratory testing for verification of XRF analyses and other contaminants of concern (COCs) following the excavation.
- Field and laboratory methods consistent with EPA and MDNR quality assurance requirements to meet specific data quality objectives.
- Data evaluations through comparison of XRF and laboratory reported concentrations to residential surface Tier 1 Risk-Based Target Level (RBTL) comparisons and/or background concentrations (if residential comparisons is not feasible based on field observations, comparison concentrations to the non-residential RBTLs will also be made).
- Document placement of soils on western portions of the West Meadows area.
- Preparation of a Remedial Action report summarizing field activities and XRF/laboratory results.

The tasks referenced above will be further supported though application of relevant Terracon Standard Operating Procedures (SOPs) provided as Appendix E, EPA technical guidance, and EPA/MDNR analytical methods.

The City's future plans include excavation and re-grading of the site and the Jordon Valley West Meadows area. Additionally, the US Army Corp of Engineers (who is involved in the City's stormwater planning) requires a clean site evidenced by MDNR's certificate of completion and this cannot be obtained without taking some action on the site.

Future Use

Prospective area redevelopment generally includes open/green space designs and greenway trail for public use and surface drainage improvements via stormwater detention to provide additional stormwater capacity. Such improvements would likely require removal and alteration of existing surface drainage patterns. Site #1 future use will include green space leading into the larger West Meadows area to the west supporting modification to Jordan Creek for surface water management.

Future plans for the creek in the vicinity of Site #1 currently include potential expansion of the creek but do not include creek re-alignment or moving the creek. This may include removal of a portion of a concrete box culvert.

Analysis of Brownfields Cleanup Alternatives (ABCA)

An Analysis of Brownfields Cleanup Alternatives (ABCA) for Site #1 within Jordan Valley West Meadows was previously completed. The ABCA concluded that based on effectiveness of protecting human health and the environment, implementablity, and cost, the recommended cleanup alternative was risk-based corrective action and management scenarios for Sites #2 through #8. As the surface soils, not including subsurface soils, are present with the elevated concentrations at Site #1, it may be feasible and cost effective to remove impacted soils from the site either to residential or non-residential standards.

In response to the site conditions discussed within, proposed remediation efforts include conventional soil excavation and off-site disposal methods to remove lead impacted soil and fill materials associated with the site. Remedial endpoints and remaining soil conditions will be evaluated through systematic excavation base and sidewall grab sampling as described in the following sections.

3.1 Problem Definition and Sampling Objective

Previous Assessments and Characterization data identified soil concentrations in excess of MRBCA standards. Cleanup requires the removal of the impacted surface soils and fill materials. The project cleanup will accomplish the following objectives:

- Remediation of soil impacts through general excavation and off-site disposal according to applicable regulations.
- Intrusive verification sampling.
- Quantitative field x-ray fluorescence (XRF) and laboratory analyses.
- Through these specific efforts, B/VCP cleanup requirements will also be addressed in a manner that allows for No Further Action (NFA) consideration by the MDNR.

3.2 Project Decision

This remedial action will remove impacted soils/fill and evaluate remaining site conditions through closure samples. The closure samples will indicate the concentrations remaining on the site. There are two possible scenarios in response to soil closure sample results:

1. Reported levels (maximum concentrations) are below applicable residential standards and do not appear to pose increased risk with regard to environmental conditions and prospective redevelopment; or

2. Reported levels (maximum concentrations or representative concentrations) are above applicable residential standards but below non-residential standards, which will require some future limitations for the site such as a restriction to non-residential use only and a soil management plan to properly manage remaining impacts in the future.

The Project Decision will be heavily based on the soil excavation area and field observations to see if the soil can be removed to meet the residential or non-residential standards. The data comparisons to applicable cleanup standards published in MRBCA Technical Guidance dated June 2006. These standards include MRBCA Default Target Levels (DTLs) and Risk-Based Target Levels (RBTLs) that represent acceptable chemical concentrations regardless of site-specific conditions. Additionally, comparisons will be made to background metal levels found in Green County from the United States Geological Survey's (USGSs) National Geochemical Survey Database.

4.0 PROJECT QUALITY OBJECTIVES

4.1 Review and Approval Assistance

Assistance for review and approval of grant quality assurance documents can be deferred to the state program with mutual agreement between EPA, the state program and the cooperative agreement recipient. The remedial action for this target property is designed to be implemented under the MDNR B/VCP. West Meadows Site #1 is enrolled in the MDNR B/VCP. The EPA Project Officer, MDNR B/VCP and City have mutually agreed to adopt quality assurance of the MDNR B/VCP with minor adjustments to satisfy the Cooperative Agreement.

4.2 Adoption of State Quality Assurance Project Plan

This Remedial Action Plan adopts the Missouri Department of Natural Resources' *Quality Assurance Project Plan for Brownfields/Voluntary Cleanup Program Sites*, Missouri Department of Natural Resources, Division of Environmental Quality, Hazardous Waste Program, Brownfields/Voluntary Cleanup Section, September 2005. (MDNR QAPP, Appendix C.)

This Remedial Action Plan incorporates the MDNR QAPP for use on this project using MDNR's Site Specific Quality Assurance addendum (SSQA, Appendix D). This is allowed for environmental data collection for confirmatory samples following remedial activities in *Section A.6.3 Remedial Action Plans/Risk Management Plans* of the MDNR QAPP.

4.2.1 Authority For Use

Mutual agreement is supported by the *MEMORANDUM OF AGREEMENT BETWEEN THE MISSOURI DEPARTMENT OF NATURAL RESOURCES AND THE UNITED STATES ENVIRONMENTAL PROTECTION AGENCY, REGION VII*, September 5, 1996 (MOA). From the MOA;

"Region VII and MDNR believe the revitalization of contaminated properties, or properties perceived to be contaminated, (often called Brownfields) will provide a significant benefit to the environment and economies of the local communities of the State of Missouri. To the extent possible, Region VII and MDNR seek to simplify the revitalization of industrial and commercial properties by addressing the existing regulatory impediments to the financing, transfer, and appropriate use of these properties. Both agencies will work in a cooperative and coordinated effort to ensure that successful implementation of this endeavor is accomplished and pledge to employ their authorities and their resources in mutually complementary, non-duplicative methods."

Adoption and use for this EPA Brownfields Cleanup Grant project was discussed with the EPA Brownfields Grant Project Officer and MDNR B/VCP Project Manager prior to development of this Remedial Action Plan.

4.2.2 Equivalency of Program Terms

The MDNR QAPP was developed using EPA guidance for Quality Assurance Project Plans. The MDNR QAPP in combination with the SSQA addendum provides for an equivalent level of quality process for this project consistent with EPA's requirements of section *IV. Cleanup Environmental Requirements, B. Quality Assurance (QA) Requirements* of agreement #BF-98796601-0.

The Remedial Action Plan includes the MDNR QAPP (Appendix C) and SSQA (Appendix D). The MDNR QAPP and the SSQA has separate signatures/approvals for the contractor and the SSQA has separate signature/approval for the MDNR Project Manager.

4.3 Data Quality Objectives (DQOs)

The primary data quality objective (DQO) is to provide valid data of demonstrated and documented quality to accurately verify the effectiveness and extent of soil remediation efforts by soil sample collection, XRF analysis, and laboratory verification analyses. Quality objectives will be realized through field and laboratory methods consistent with standard industry practice, applicable EPA analytical requirements, and the specific procedures outlined herein. Data quality will be further demonstrated through Terracon and laboratory quality control reviews with regard to specific data quality indicators as discussed in the

following section. This approach will allow for defensible project decisions regarding the overall degree of environmental impact and associated risk.

Standard industry quality control (QC) and quality assurance (QA) protocols will be followed to ensure generation of data usable for final determinations regarding post-removal site conditions and subsequent response action, if necessary. The MDNR Generic QAPP and SSQA discusses QA/QC procedures in more detail. The MDNR Generic QAPP is provided as Appendix C and the SSQA is provided as Appendix D. Additional details regarding specific quality control procedures are presented under Section 8.0.

4.4 Data Quality Indicators (DQIs)

Laboratory data quality will be measured in terms of precision, accuracy, representativeness, completeness, comparability, and sensitivity (PARCCS) as defined below. Various quality control samples will therefore be collected and analyzed to quantitatively evaluate these parameters. Associated quality control procedures are discussed in Section 8.0. Specific measurement criteria are outlined in Section B5 of the MDNR B/VCP QAPP.

Precision: A measure of the reproducibility of analyses under a given set of conditions.

Accuracy: A measure of the bias that exists in a measurement system.

Representativeness: The degree to which sampling data accurately and precisely depict selected characteristics.

Completeness: The measure of the amount of valid data obtained from a measurement system compared to the amount that was expected to be obtained under “normal” conditions.

Comparability: The degree of confidence with which one data set can be compared to another.

Sensitivity: The concentrations at which the analytical technology is able to detect the presence of specific analytes (i.e. detection limits).

5.0 SITE CONCEPTUAL MODEL

Terracon previously completed a MRBCA Tier 1 Report for Site 1 in October 2009 (Terracon Project Number 02087047). The Tier 1 report has since been approved by the MDNR and the EPA. Information to complete the MRBCA Tier 1 evaluation was collected from the assessment activities performed at the Champieux, Tract 1: BNSF and Tract 2: U.P. properties.

Based on review of previous soil analytical data, the soils have been generally delineated on-site to Risk Based Target Levels (RBTLs) for Soil Type 1 (Sandy Soil) per Section 5.8.1 of the MRBCA Guidance Document.

Based on the soil concentrations at the site and evaluation of the potential exposure pathways associated with the site, one dominant exposure pathway is associated with the site:

- Surface Soil (current and future non-residential) protective of ingestion, inhalation (outdoor vapor emissions and particulates) and dermal contact with surficial soils.

Based on review of existing data and complete exposure pathways, the representative (average) concentrations of arsenic, cadmium, lead, and benzo(a)pyrene are above the Tier 1 RBTL for Non-Residential Land Use Soil Type 2 for the ingestion, inhalation (vapor emissions and particulates) and dermal contact cleanup criteria. The existing data also indicates that concentrations of benzo(a)anthracene, benzo(b)fluoranthene, dibenzo(a,h)anthracene, and indeno(1,2,3-cd)pyrene were detected above the Tier 1 RBTLs for Residential but below Non-Residential Land Use Soil Type 2 for ingestion, inhalation (vapor emissions and particulates) and dermal contact cleanup criteria. The remaining COCs representative concentrations (including some maximum concentrations) are below the applicable Tier 1 RBTLs for Residential Land Use. Appendix B provides tables of the soil data collected from the surface soils.

Based on the complete exposure pathway: ingestion, inhalation (vapor emissions and particulates) and dermal contact; impacted surface soils exceeding Tier 1 MRBCA will be excavated and disposed at a certified landfill or properly managed within the Jordan Valley West Meadows project area.

As the surface soil is excavated at the site and not replaced with clean fill, the laboratory results for the next three feet would be compared to the applicable surface soil RBTLs. Based on the review of available laboratory analytical data, it appears that the next several feet of soil does not contain contaminant impacts at concentrations above the applicable surface soil RBTLs.

According to the MDNR, closure to residential (unrestricted use) must be based on individual maximum concentrations. Closure to non-residential can use a representative concentration based on an average of the remaining concentrations.

5.1 Nature of Impact

Based on previous assessments and characterization sampling data at the site, COCs in connection with the subject property include:

- arsenic
- lead
- cadmium
- benzo(a)pyrene

- benzo(a)anthracene*
- benzo(b)fluoranthene*
- dibenzo(a,h)anthracene*, and
- indeno(1,2,3-cd)pyrene*.

Results indicated that the COCs identified above with an asterisk (*) do not exceed non-residential RBTLs. Summary tables of the PAH concentrations and metal concentrations within the surface soil (0-3 feet) are provided in Appendix B.

Metals concentrations above residential RBTLs and established naturally occurring concentrations appear to be present variably throughout the Site to depths generally ranging from between 3 feet to 3.5 feet bgs. These metal concentrations appear to be related to the presence of fill material located throughout the Site at an approximate average depth of 3 feet to 3.5 feet bgs.

PAH concentrations above residential RBTLs also appear to be present variably throughout the shallow soils at the Site. Impact appears to be generally located within the upper 3.5 feet bgs. Impact appears to be attributable to fill material present at the Site.

The source of the detected impact to the on-site fill and soils appears to be related to former industrial and railroad operations in the area of the site (including the site). A specific on-site source of impact does not appear to be specifically isolated to Site #1.

Laboratory analysis of two representative TCLP samples at the site (further discussed in Section 6.2.1) indicated that arsenic, cadmium, and lead were either not detected at concentrations above the laboratory reporting limit or at concentrations below the applicable maximum concentration of contamination for toxicity characteristics. Therefore, the impacted soils are not characteristically hazardous and may be managed as special waste.

The subsurface soils and groundwater are not impacted above applicable levels and are not addressed within this RAP.

5.2 Area of Impact

The COC's at the site are present variably throughout the Site. However, once plotted together on a site diagram, the area of impact above residential RBTLs become more defined and is noted on Figure 5. It appears the majority of Site #1 is present with fill and concentrations above residential RBTLs, except for the far western property boundary area and the southeast property boundary area.

As the impact present on the site is based on historical area uses, the area of impact is present up to the property boundaries. Excavation activities will go up to the property boundaries but not beyond. It is our understanding that the site can still gain regulatory closure without further excavation off site. Impact present to Site #2 adjoining to the west will be addressed during subsequent remedial actions and the parking lot to the east currently functions as an engineered cap over other identified impact. Jordan Creek adjoins the site to the north and an active rail spur adjoins the site to the south. Therefore, further

notification to adjoining property owners is not applicable regarding potential impact is not required.

6.0 REMEDIAL ACTION TASKS

Conventional soil excavation strategies will be applied to remediate identified impacts to soil and fill materials. Heavy excavation equipment (e.g., backhoe, uniloader etc.) will be used to perform general excavation activities. One soil excavation area (see Figure 5) is proposed based on previous findings. The City of Springfield, based on this RAP, will select a remediation excavation contractor based on a competitive bid process.

6.1 General Excavation Methods

The following table discusses the initial excavation activities based on previous sampling results:

Table 3. Area Excavation Data Site #1

Depth	Average of 3 feet to 3.5 feet bgs
Estimated square footage	35,600 square feet
Estimated cubic yards	6,922 cubic yards

Figure 5 illustrates proposed initial excavation areas on a scaled site map. Section 6.2 describes the soil management protocol.

The excavation will occur based on field observations and XRF field screening. Excavation base samples and side-wall/perimeter samples will be collected for XRF and laboratory verification analyses following the initial excavation.

As supports for the Grant Avenue viaduct are present on the site, the excavation activities will get as close to the supports as possible without impacting the integrity of the supports themselves. Terracon will consult either the Missouri Department of Transportation or in-house Geotechnical professionals to verify excavation procedures.

Excavation equipment will not cross the south adjoining railroad tracks accept on authorized public streets. Additional safety precautions of note (which will be indentified in the remediation contractors bid specifications) also include the overhead presence of the Grant Street Viaduct.

The soils will be screened with an XRF. If metal concentrations are observed above the MDNR residential Risk Based Target Level (RBTL) or established background ranges shown below, the excavation area will expand as needed until metal concentrations above residential RBTLs or established background levels are no longer observed. If field observations during the excavation determine that it does not look feasible to remove the

soil to concentrations below the residential RBTLs, then the excavation will continue to remove concentrations below the non-residential concentrations.

Historical data (see Section 2.3) indicates that generally the COCs are co-mingled; therefore, lead will be the driving contaminant for the excavation. If the lead concentration is below 260 mg/kg, the arsenic and cadmium concentrations will be compared to the MDNR RBTL values for Residential Land Use Soil Type 1 Ingestion, Inhalation (Vapor Emissions and Particulates), and Dermal Contact; the MDNR RBTL values for Non-Residential Land Use Soil Type 2 Ingestion, Inhalation (Vapor Emissions and Particulates); or the background range of metal levels found in Green County from the United States Geological Survey's (USGSs) National Geochemical Survey Database. These values are noted in Table 4 below.

Table 4. MDNR RBTL Comparison Values

Contaminant of Concern	Residential RBTL (Soil Type 1) mg/kg	Non-Residential RBTL (Soil Type 2) mg/kg	Background Range mg/kg
Lead	260	660	27 to 68
Arsenic*	3.89	15.9	<10 to 13
Cadmium	16.8	74.8	<2
Benzo(a)pyrene**	0.62	2.11	Not established
Benzo(a)anthracene**	6.2	21.1	Not established
Benzo(b)fluoranthene**	6.19	21	Not established
Dibenzo(a,h)anthracene**	0.62	2.11	Not established
Indeno(1,2,3-cd)pyrene**	3.77	12.8	Not established

Notes: * The arsenic range reported for the state of Missouri is 4.4 mg/kg to 18 mg/kg in the Missouri Geometric Mean from the Geochemical Survey of Missouri, Geological Survey Professional Paper 954-H, dated 1984.
** Indicates the COC will not be screened with XRF.

PAHs will be evaluated through laboratory confirmation sampling and not via XRF analysis. The concentrations cannot be averaged if levels within the closure samples are screened against residential RBTLs. However, concentrations can be averaged if levels are screened against the non-residential RBTLs.

Section 7.0 discusses field sampling and XRF and laboratory analysis procedures.

6.2 Soil Management

Excavated soils will be loaded directly into dump trucks (or temporarily stockpiled) for off-site transport and disposal to Jordan Valley West Meadows Site 5 through 8. No excavated materials will be used as on-site backfill within the excavation. Since the soils are being placed on the western portions of West Meadows, the excavated soils are evaluated to determine if a representative concentration of the individual COCs are either above or below the Non-Residential RBTLs.

- If the concentrations are below the Non-Residential RBTLs, the soils will be place in one area of the site to later be graded and vegetated with some topsoil only to allow for the vegetation to properly grow.
- If the concentrations are above the Non-Residential RBTLs, the soils will be place in a separate area of the site to later be graded and encapsulated with 18 inches of clean cover material.

The representative concentration of the soil to be excavated was evaluated (as detection averages in the tables provided in Appendix B). Based on this review, the average detection of the COCs at the site are below the Non-Residential RBTLs except for benzo(a)pyrene due to an elevated concentration detected at sample location BNS-US-SB073-04 in the west central portion of the site.

Therefore, the soil present in the vicinity of sample location BNS-US-SB073-04 will be place in a separate pile area for later encapsulation. The remaining soils will be placed on the western portion of West Meadow and prepared for site restoration as discussed in Section 6.4.

Additional impacted excavated soils from other portions of West Meadows (Sites 1 through 4) will also be placed and managed on Sites 5 through 8.

The following sections discuss post-excavation disposal characterization and disposal practices in detail.

6.2.1 Disposal Characterization

During the Brownfields Characterization for Remedial Design for Jordan Valley West Meadows Site #1 (Terracon Project Number 02087047) dated February 11, 2010, two composite samples were combined from the east and west portions of the site to be analyzed per the Toxicity Characteristic Leaching Procedure (TCLP) for hazardous waste and disposal characterization.

TCLP data was compared to the CFR 261.24 Toxicity Characteristics of Hazardous Waste, which provided the maximum concentrations of contaminant for the toxicity characteristics.

The laboratory analysis of the TCLP extraction indicated that arsenic, cadmium, and lead were either not detected at concentrations above the laboratory reporting limit or at concentrations below the applicable maximum concentration of contamination for toxicity characteristics. Therefore, the impacted soils are not characteristically hazardous and may be managed as special waste.

6.2.2 Non-Hazardous Disposal

Non-hazardous soil and fill materials (i.e. TCLP concentrations less than the maximum concentration of contamination for toxicity characteristics) will be transported off-site using general construction end dump trucks and loading equipment. Volume of removed and

disposed material will be documented and estimated through truck counts, final survey data, and field measurements.

The soil and fill materials will be placed and managed on Jordan Valley West Meadows Site 5 through 8, the western portion of West Meadows as discussed in Section 6.2.

6.2.3 Hazardous Waste Generation and Disposal

Based on Remedial Design TCLP data, the arsenic, lead, and cadmium impacted soil and fill materials are not hazardous. Therefore, management and disposal of hazardous material is not included in this plan. If subsurface conditions change (such as a pocket of material different from observed ruble fill) alternative sampling procedures and disposal procedures will be discussed with MDNR and implemented accordingly.

6.3 Concrete Removal

The concrete slab located on Site #1 will be scraped of excess soils, broken up, and disposed at a C&D landfill as a non-permitted material.

6.4 Site Restoration

No backfill is anticipated with the field activities. Following completion of excavation activities, the area will be graded to allow for proper stormwater flow (limit pooling) to Jordon Creek and to limit risks of slips/trips/and falls to the general public and wildlife. The excavated area will be seeded to allow for vegetative growth. In addition, silt fencing or storm water best management practices will remain in-place until vegetative growth has been established.

Due to the poor quality of the native red clay soils in the area, it will be necessary to import some compost and/or topsoil to establish a good base of plant growth.

During the cleanup planning process the City and an environmental consultant coordinated with Kansas State University who developed the *West Meadows Conceptual Landscape Plan* with narrative, plant lists and notes. This landscape plan incorporates the post cleanup grading of the site and provides planting guidance and guidelines for post-remedy stabilization and control of ground surface areas and pocket wetland areas.

7.0 CONFIRMATION SAMPLING AND LABORATORY ANALYSIS

The Remedial Action Plan is to quantitatively determine, within a reasonable degree of certainty, the excavation will remove the impacted on-site soils and fill materials.

7.1 Confirmation Sampling Strategy, XRF Field Analysis, and Rationale

XRF technology will be applied to analyze soil excavation samples for lead, arsenic, and cadmium. Field XRF procedures will be consistent with U.S. Environmental Protection Agency (USEPA) Method 6200. Samples will be homogenized prior to analyses to provide data representative of the entire sample interval. Rocks, gravel, and other heterogeneous materials will be removed from the samples prior to analysis to limit matrix interference. Section 7.2 describes XRF sample handling procedures and Section 8.0 discusses XRF quality control parameters.

XRF samples will be collected from the excavation base and each exposed excavation side-wall. Samples will be collected following the initial excavation and each excavation expansion, as appropriate based on the nature of the expansion, if necessary. For example, additional side-wall samples will not be collected if only vertical expansion excavation occurs. Side-wall samples will be collected from the exposed side-wall surface based on the greatest potential for impacts. Excavation base samples will be collected from the excavation base surface.

Confirmation grab samples will be collected using a stainless steel spade, hand trowel, hand auger, or other relevant sample collection equipment. Related sample collection, handling, and storage procedures shall remain consistent to those outlined in this Remedial Action Plan; however, photoionization detector (PID) screening of grab samples is not proposed.

Samples will be collected at a minimum frequency of:

- one base sample per every 900 (30ft by 30ft) square feet and
- one side-wall/perimeter sample per every 20 linear feet.

A systematic grid pattern will be used to establish excavation base locations. If a sidewall is greater than 2 feet in height, a sidewall closure sample will be collected per closure sample frequency.

Table 5 below summarizes proposed sampling strategy, frequency, rationale, and related sampling parameters.

Table 5. Sampling Frequency, Rationale, and Parameters

Sample Description	XRF Sampling Frequency	Laboratory Submission Frequency	Laboratory Analyses
Field Screening Grab Samples	All samples collected will be field screened with the XRF. If XRF analysis indicates results above targeted levels, these samples will be considered field screening samples and not be considered closure samples. If XRF analysis indicates results below the targeted levels, the samples if collected from the bottom/sidewall of the excavation will be considered closure samples and following the sampling frequency outlined below in this table.		
Cleanup Verification (Closure) Grab	Based on excavation areas completed, or one base sample per every 900 square	Minimum of 20% of the total number of cleanup verification samples collected for XRF	Total Lead, Arsenic, and Cadmium by Method 6010;

Samples (Metals)	feet, whichever results in the greater; or one sample per every 20 linear feet (if vertical face greater than 2 feet)	analysis	
Cleanup Verification (Closure) Grab Samples (PAH)	Based on excavation areas completed, or one base sample per every 900 square feet, whichever results in the greater; or one sample per every 20 linear feet (if vertical face greater than 2 feet)	Minimum of 50% of the total number of cleanup verification samples collected for XRF analysis	PAHs by Method 8270C
Post-Excavation Soil Disposal Characterization	Not Applicable	Previously completed, no additional disposal characterization is needed	
Duplicate Soil Grab Samples	Duplicate XRF analysis at a frequency of five percent of the total number of samples collected, or one duplicate per day's use, whichever results in the greater	Minimum of one field duplicate for the project or at a frequency of five percent of the total number of cleanup verification samples submitted for laboratory analysis	Total Lead, Arsenic, and Cadmium by Method 6010; PAH by Method 8270C
Equipment Blank (rinsate) samples	Not Applicable	Minimum of frequency of two equipment blank samples, not to be collected on same sampling day	Total Lead, Arsenic, and Cadmium by Method 6010; PAH by Method 8270C

Figure 5 illustrates the estimated excavation area. The final excavation area will be determined in the field based on XRF analysis, field observations and professional judgment as discussed between the Terracon Project Manager and field staff. Additional details regarding specific field and laboratory methods are outlined in subsequent sections of this plan.

7.2 Sample Collection and Handling

Soil and blank water samples will be collected and handled consistent with standard industry practice and applicable EPA analytical methods. Sample containers will be labeled with sample-specific identifiers (e.g. sample ID, date, time, etc.) prior to sample collection, sealed, and immediately placed in designated sample coolers for laboratory submission. Signed chain-of-custody documentation will accompany the sample coolers at all times. Barring minimal sample recoveries, collected volumes will be sufficient to perform all relevant field and laboratory analytical procedures without compromising data quality.

Table 6 outlines the required sample containers specific to each laboratory method and summarizes associated preservation and storage parameters. The following subsections discuss sample collection and handling procedures in detail. General sample handling, storage/shipping, and chain-of-custody procedures are further discussed under the following subsections.

Table 6. Analytical Methods and Sample Storage

Sample Media	Analysis	Field/Lab	Analytical Method	Container/Storage	Preservative	Holding Time
SOIL Grab Samples	Total Arsenic, Cadmium & Lead	Field	6200	1 x 1.0 liter plastic Zip-Lock® (or equivalent) bag	None	180 days
		Laboratory	6010B	1 x 2 or 4 oz. glass ; cool to 4º Celsius		
	PAH	Laboratory	8270C	1 x 4 oz. glass for one or both analyses; pack to minimal headspace; cool to 4º Celsius	None	14 days to extract, 40 days to analyze
WATER (Blanks)	Total Arsenic, Cadmium & Lead	Laboratory	6010B	1x 250 ml plastic; cool to 4º Celsius	HNO_3	180 days
	PAH	Laboratory	8270C	1 x 1 liter glass amber with minimal headspace; cool to 4º Celsius	None	7 days to extract, 40 days to analyze

7.2.1 Soil Grab Samples

Confirmation laboratory grab samples will be collected at a frequency as described in Section 7.1. Grab samples will be collected immediately following the excavation to maintain sample integrity. The PAH samples will be collected directly into laboratory-supplied containers and immediately placed on ice in the designated sample cooler. Alternatively, the sample may be collected in a Zip-Loc® (or equivalent) bag, sealed with minimal headspace, and immediately placed on ice pending laboratory submission determinations. All samples collected in this manner will be transferred to laboratory-supplied sample containers prior to laboratory submission.

7.2.2 Water Blank Samples

Equipment blank samples will be obtained by pouring distilled or deionized water over reusable sampling equipment – sampling shovel – following the decontamination procedures discussed below. Blank samples will be captured directly into laboratory-supplied containers prior to contact with additional media. Blank sample containers will include appropriate preservatives and will be placed on ice in the designated sample cooler immediately following collection.

7.3 Laboratory Methods

Laboratory analysis will occur at the sample locations identified as “closure” based on the XRF field analysis and a minimum frequency outlined in Section 7.1.

Based on previous investigation, contaminants of concern (COCs) in connection with the subject property and this investigation include lead, arsenic, cadmium, and PAHs. Specific COCs and associated analytical methods with this investigation are further summarized in the following:

Laboratory Analysis	Analytical Method
Total Lead, Arsenic, & Cadmium	6010B
PAH	8270C

Laboratory samples will be submitted to Environmental Science Corporation (ESC) of Mount Juliet, Tennessee. ESC has primary and secondary accreditation through the National Environmental Laboratory Accreditation Program (NELAP) and is therefore a qualified laboratory under the MDNR B/VCP. Standard 7 to 10 business day laboratory turnarounds will be requested. Terracon may request rush turnaround times to expedite soil removal efforts. Environmental Science Corporation Laboratory Quality Assurance Program Manual is provided on Compact Disk attached in Appendix F.

Table 7 summarizes the tentative laboratory submission protocol. The following section outlines laboratory sample submission criteria in detail.

Table 7. Laboratory Sample Submission

Location ID	Description	Number of Samples (minimum)	Total Lead, Arsenic, & Cadmium by 6010B	PAH
Cleanup Verification (Closure) Grab Samples	Soil Grab Bottom of Excavation	20% of total number of closure samples analyzed by XRF	X	
Cleanup Verification (Closure) Grab Samples	Soil Grab Side wall/perimeter		X	
Cleanup Verification (Closure) Grab Samples	Soil Grab Bottom of Excavation	50% of total number of closure samples analyzed by XRF		X
Cleanup Verification (Closure) Grab Samples	Soil Grab Side wall/perimeter			X
Laboratory Duplicate	Closure Sample	5% of total laboratory submission samples	X	X
Equipment Blank	Water Blank	2	X	X

7.4 Sample Submission Criteria

7.4.1 Soil Grab Samples

At least 5% of the laboratory samples will be submitted for duplicate samples. Table 5 in Section 7.1 summarizes the laboratory sample submission frequency.

As outlined in 7.1, laboratory verification analysis will occur at a minimum frequency of 20 percent for metals of the total number of XRF closure samples analyzed and 50 percent for PAHs of the total number of XRF samples analyzed. These grab soil samples will be

submitted for laboratory testing and will be analyzed for lead, arsenic, and cadmium by Method 6010B consist with Table 7 above in previous sections of this Remedial Action Plan. Additional soil testing that results in a significantly altered project scope and increased costs will not be performed prior to City and EPA approval.

7.4.2 Quality Control Samples

Field duplicates, blanks, and other relevant quality control samples will be laboratory analyzed consistent with the SSQA and MDNR B/VCP QAPP. Table 7 summarizes the tentative quality control sampling and analysis protocol. Additional information regarding quality control sampling and analysis are presented in the SSQA and MDNR QAPP.

7.4.3 General Contingencies

Sample analyses or “hold” analyses in addition to those specifically described above may be performed if field observations and screening suggest additional data is needed to achieve project objectives. Such findings may warrant further testing using the predetermined analytical methods referenced above or additional methods specific to the conditions encountered. Alternatively, site obstructions and limited sample recovery, may prevent full completion of the analytical procedures proposed in this RAP. If unanticipated conditions and/or data needs are identified, related determinations will be made by the Terracon Project Manager following appropriate discussions with Terracon field personnel, MDNR, and the City. Alternative methods beyond the specified scope and intent of this RAP will not be applied prior to City and EPA authorization.

7.5 Decontamination and Investigative Wastes

7.5.1 Cleaning Procedures

Sampling equipment will be cleaned and decontaminated consistently to further maintain sample quality. Non-dedicated equipment in contact with potentially contaminated media will not be reused prior to decontamination in accordance with procedures outlined below.

Equipment decontamination will generally consist of Alconox® solution cleaning using a stainless steel or nylon brush, followed by a potable and distilled water rinses. Field personnel will wear disposable gloves during the process to increase personal protection and prevent potential cross-contamination.

The following Terracon SOPs will be applied as general guidance for equipment cleaning procedures not specifically addressed above:

- E.2405 Cleaning - General
- E.2410 Cleaning - Manual Washing

7.5.2 Investigative Derived Waste

Investigative wastes will be managed accordingly to maintain existing site conditions and prevent increased exposure risks. Associated procedures are designed to meet the following management objectives:

- Leave the site in no worse condition than prior to the characterization
- Remove wastes that threaten human health and the environment
- Comply with federal, state, and local requirements
- Minimize IDW volumes to the extent possible without compromising project objectives

Based on the proposed scope of work, it is anticipated that field activities will generate small volumes of investigative derived waste (IDW). Project IDW will generally include:

- Soil screening samples
- Disposable sampling equipment
- Used personal protective equipment
- Cleaning liquids

Soil and liquid IDW will be temporarily contained on site pending review of XRF results. If minimal or no indications of impact are noted, these materials will be disposed adjacent to associated the excavation area following collection of soil samples. Spent personal protective equipment (PPE)and disposable sample equipment will be disposed of as municipal solid waste.

The following Terracon SOPs will be applied as general guidance for IDW management procedures not specifically addressed above:

- E.2220 Disposal of Spent Supplies

7.6 Field Documentation

7.6.1 Project Remedial Action Plan

A field copy of the project Remedial Action Plan will be maintained by the Terracon Field Supervisor at all times. Prior to field mobilization, the Terracon Project Manager will hold a field briefing to review field procedures with the Field Supervisor and other relevant field staff. The Project Manager will verify that a field copy of the most current and approved Remedial Action Plan is available at that time.

7.6.2 Field Logbook

The Field Supervisor and other field personnel will document field activities in a field logbook. Field logs will be documented in ink with any corrections crossed out and initialed. The logbook will document daily field activities in chronological order with regard to the following general procedures:

- Observed site conditions

- Sample collection information
- Problems encountered and sampling plan deviations (if any)
- Photograph description
- Other information related to field procedures

7.6.3 Photo-Documentation

Photographs of the subject area, excavation area, and general field procedures will be taken to further document the soil removal efforts. These records will serve to support information entered in the field logbook and visually document the excavation area. The following information will be recorded in the field log in regard to each photograph:

- Time, date, view , and location
- Subject description
- Photographer

7.6.4 Soil Sampling Locations and Measurements

The excavation area will be measured from at least two reference point identifiers (e.g. streets, buildings, etc.). Location measurements will be recorded (or sketched) in the field logbook and/or on an scaled map. Cleanup, disposal and post-remedy documentation of community protection requires more precise measurement of sampling and analysis for disposal than general assessment conducted to date. These locations will be surveyed to global positioning system (GPS) coordinates using a GPS unit and tied back to survey stakes present on the corners of the property.

8.0 QUALITY CONTROL

Remedial Action Plan activities will be performed consistent with the QA/QC requirements outlined in this Plan and the SSQA and MDNR B/VCP QAPP. Terracon SOPs will be applied as additional guidance for certain field and laboratory procedures. Specific quality control measures will include duplicate and blank sampling, standard chain-of-custody protocols, and standardized field and laboratory methods per this Technical Work Plan and the SSQA/QAPP.

Remedial design characterization data will be systematically reviewed and validated consistent with SSQA and MDNR B/VCP QAPP to further document data quality and usability. Data validation will consist of a complete review of field and laboratory methods and associated documentation relative to the approved Technical Work Plan and MRBCA Technical Guidance. This process will be initiated immediately upon completion of field activities and will be completed prior to development of the final report. At a minimum, the data validation process will address the following:

- Quality objectives and data measurement criteria
- Sampling process design
- Sampling methods

- Sample handling and custody requirements
- Quality control requirements

Additional details regarding data validation and general QA/QC procedures are presented in the SSQA and MDNR B/VCP. Terracon SOPs relevant to this project are provided as Appendix E. A summary of the data validation quality comparisons are provided below:

- Sampling frequencies and duplicate samples will be collected as outlined in Section 7.1.
- Duplicate XRF relative percent difference (RPD) anticipated range will be less than 20%*.
- Equipment blanks should not have COCs above the detection limit.
- Resulting regression analysis r^2 values of 0.7* or higher will document quantitative screening quality XRF data. Resulting regression analysis r^2 values of 0.9 or higher will document definitive level XRF data. XRF data with a corresponding r^2 values less than 0.7 will be considered qualitative in nature.
- NIST RPD anticipated range will be less than 20%*.

The asterisk (*) indicates the comparison was obtained from the Community Wide Quality Assurance Project Plan, Document Revision 2.0 dated May 2008.

Site specific procedures not otherwise discussed within this plan include the following.

8.1 XRF Calibration And Quality Control

An Innov-X tube-based XRF analyzer will be used to perform XRF analyses. XRF procedures will be consistent with USEPA Method 6200, the Generic QAPP, and operator manual instructions.

XRF standardization will occur according to manufacturer specifications at the beginning and end of each day the XRF instrument is used, and generally following analysis of every 20 samples. Additionally, National Institute of Standards and Technology (NIST), or equivalent, standard samples will be utilized to compare reported concentrations to true values of the beginning and end of each field day. If reported levels are not generally within 20 percent of true values, the XRF instrument will be recalibrated prior to additional use. USEPA Method 6200 and the operator manual further outline XRF start-up and standardization/calibration procedures.

Rocks, gravel, and other heterogeneous materials will be removed from XRF samples prior to field analysis to minimize matrix interference. Samples will be homogenized in the field to further reduce interference and provide data representative of the entire sample interval. Samples will be analyzed for a minimum of 30 seconds to reduce detection limits. Duplicate XRF analyses will occur as needed to generate a minimum of 5% duplicate data.

Consistent with Method 6200, XRF data quality will be evaluated through a statistical regression analysis of XRF data versus laboratory data. Regression analysis results will be documented and discussed in the final report as basis for acceptance or rejection of data.

9.0 PROJECT SAFETY AND TRAINING

9.1 Special Training Requirements / Certification

Terracon field personnel and other persons directly involved in Remedial Action Plan implementation will be required to read and remain familiar with this Remedial Action Plan and the Terracon SOPs applicable to the project. It will be the responsibility of the Terracon Project Manager to ensure that all necessary personnel have reviewed and understand proposed procedures herein. Informal planning meetings may be held by the Project Manager prior to field work to further ensure familiarity with proposed sampling methods.

Field staff will possess the appropriate Occupational Safety and Health Administration (OSHA) training certificates for hazardous waste site workers. This will include a minimum of 40-hour base training and appropriate 8-hour annual refresher training. Staff without 40-hour training may be used to conduct activities that do not involve potential contact with hazardous materials. Terracon personnel also receive monthly site investigation and related training through Terracon's internal continued education process.

9.2 Health and Safety Plan

A site-specific Health and Safety Plan (HASP) is provided in Appendix G. Field procedures will be performed consistent with the site-specific HASP to promote field safety through the duration of the project. Field personnel will be required to read and sign the HASP prior to performing any project activities on site. In addition, the Terracon Field Supervisor will hold an on-site "tailgate" health and safety meeting with Terracon and subcontractor staff prior to initiating field activities.

9.3 Utility Clearance

The Terracon Project Manager or Field Supervisor will request utility line locates through the Missouri One-Call no less than 72 business hours prior to initiating field activities. An on-site meeting with City of Springfield and utility personnel may be held to ensure all utilities within the subject area have been identified and clearly marked. Subsurface activities will occur no less than three feet from marked areas. Utility clearance documentation will be kept on site through the duration of field activities.

9.4 Excavation Area

Soil excavation areas will be clearly marked, taped off, or temporarily fenced following completion of each day's field activities. The specific security measure applied will be based on the depth of the soil excavation. In addition, excavation sidewalls will be sloped to prevent generation of confined spaces and limits potential falls if someone does enter. If necessary, dust generation will be minimized through water application to excavated soils and/or the excavation area.

10.0 PROJECT REPORTING

Remedial activities will be documented through generation of field records, interim progress updates (as requested), laboratory reports, and the remedial action report summarizing excavation activities and laboratory results. Terracon will develop the remedial action report for City review following completion of the field, laboratory, and data validation procedures outlined herein. Copies of the final Remedial Action Report will be distributed in accordance with Section 2.4.3.

Report discussion and documentation will generally include the following:

- General site description and photograph log
- Discussion of specific field and laboratory methods
- Site and sample location diagrams
- Analytical summary tables
- Complete laboratory reports with chain-of-custody forms and quality control results
- MRBCA Tier 1 comparisons
- Quality control and data validation summary
- General excavation documentation
- Terracon conclusions and recommendations

11.0 ASSUMPTIONS AND WORK PLAN DEVIATIONS

This Remedial Action Plan assumes that site conditions will allow activities proposed herein to occur in a timely and safe manner. If site conditions will not allow activities to occur safely and as planned, or if site conditions, field observations, and field data suggest that modified strategies are warranted to achieve project goals, minor modifications may be applied at the direction of the City of Springfield and/or Terracon Project Manager. If modified strategies are applied, these efforts will remain consistent with the quality control portions of this document and the approved SSQA/QAPP. Field notes and report discussion will document any modifications to this plan. Alternative methods beyond the specified scope and intent of this Remedial Action Plan will not be applied prior to City and EPA/MDNR authorization.

12.0 REFERENCES

Missouri Department of Natural Resources (MDNR). 2006. Missouri Risk-Based Corrective Action (MRBCA) Technical Guidance. MDNR, Jefferson City, MO.

Terracon Consultants, Inc. 2010. Brownfields Characterization for Remedial Design Report – Terracon Project No. 02087079.

Terracon Consultants, Inc. 2009. Missouri Risk-Based Corrective Action (MRBCA) Tier 1 Report, West Meadows Site #1. Terracon Project No. 02087047. Terracon, Lenexa.

Terracon Consultants, Inc. 2001. Terracon Standard Operating Procedures for EPA Brownfield Projects, Volumes 1 and 2 and as updated 2007.

United States Department of Agriculture (USDA). 1982. Soil survey of Greene and Lawrence counties, Missouri. USDA, Soil Conservation Service, Washington, DC.

EPA. 2004. Streamlined investigations and cleanups using the Triad approach, participant manual. EPA, CERCLA Education Center, Washington, DC.

EPA. 2002. Guidance for quality assurance project Plans, EPA - QA/G-5. Publication EPA/240/R-02/009. EPA Office of Environmental Information, Washington, DC.

EPA. 2001. Requirements for quality assurance project plans, EPA - QA/R-5. Publication EPA/240/B-01/003. EPA Office of Environmental Information, Washington, DC.

EPA. 1998. Quality assurance guidance for conducting brownfields site assessments. Publication EPA 540/R/98/038. EPA, OSWER, Washington, DC.

United States Geological Survey (USGS). 1991. USGS 7.5 minute series topographic map, Springfield, Missouri quadrangle. USGS, Reston, VA.

Midwest Environmental Consultants (MEC). Phase I Environmental Site Assessment (ESA) for the Property at 725 W. Olive in Springfield, Missouri.

Terracon Consultants, Inc. 2005. Phase II ESA on the Champieux Property Terracon project number 02047133. Terracon, Lenexa.

Geochemical Survey of Missouri . 1984. Geochemical Survey of Missouri, Geological Survey Professional Paper 954-H.

APPENDIX A

Figures

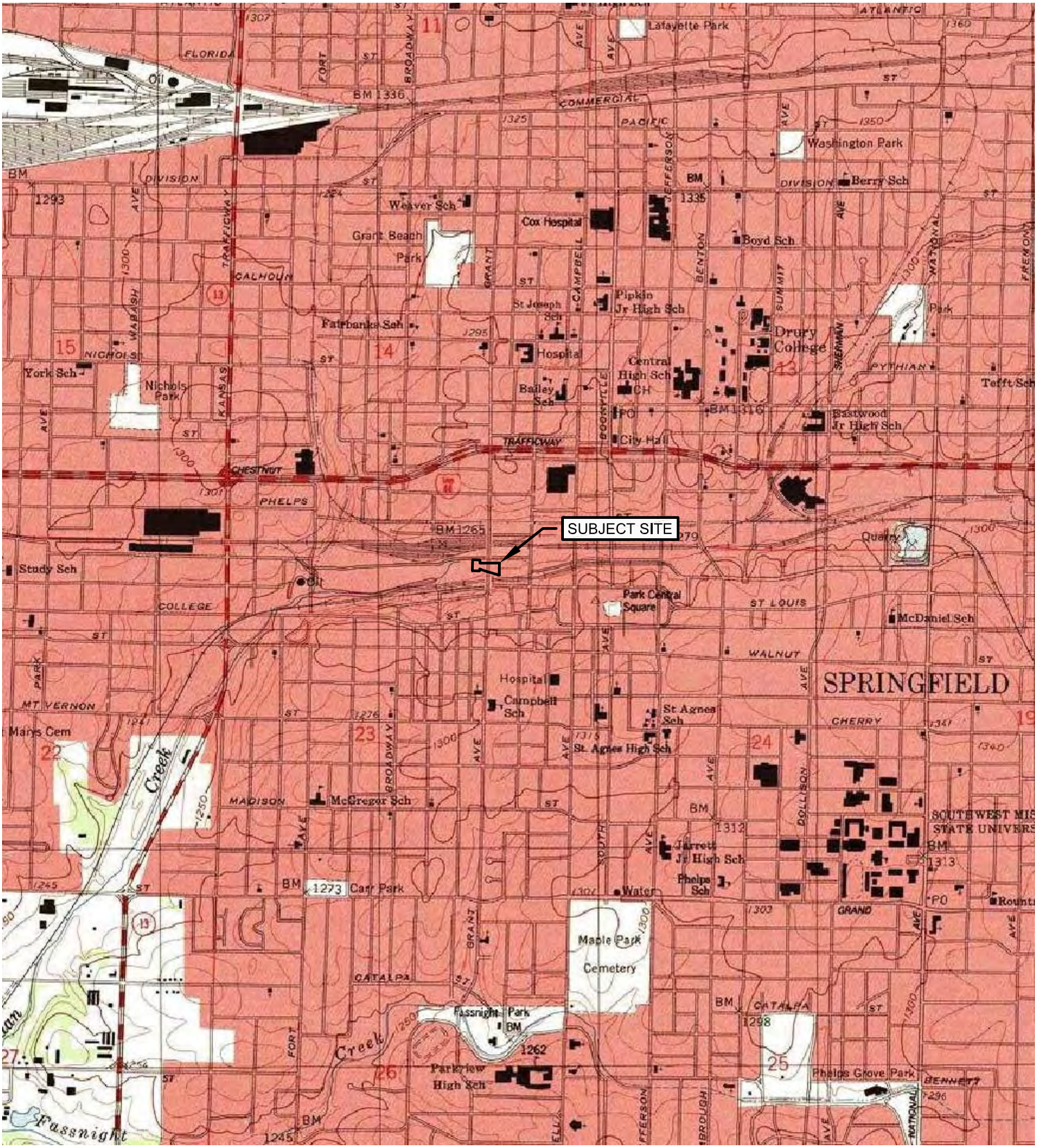

0 1,000' 2,000' 4,000'

N

U.S.G.S. 7.5 MINUTE SERIES TOPOGRAPHIC MAP

STATE OF MISSOURI QUADRANGLE
SPRINGFIELD
1975

DIAGRAM IS INTENDED FOR GENERAL USE ONLY, AND IS NOT FOR CONSTRUCTION PURPOSES. LOCATIONS ARE APPROXIMATE.

FIGURE 1 - TOPOGRAPHIC MAP
WEST MEADOWS SITE #1
JORDAN VALLEY CREEK REDEVELOPMENT AREA
SPRINGFIELD, GREENE COUNTY, MISSOURI

Project Mngr:	ADS	Terracon	Scale:	SHOWN
Designed By:	ADS	13910 W. 96th Terrace Lenexa, Kansas 66215 Phone: (913) 492-7777 Fax: (913) 492-7443	Date:	02/16/10
Checked By:	ADS		Project No.	B5097016A
Approved By:	ADS		File Name:	B5097I6FI.DWG
Drawn By:	DBM		Figure No.	1

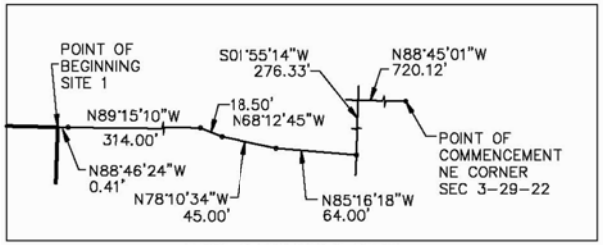

POINT OF BEGINNING DETAIL
(NTS)

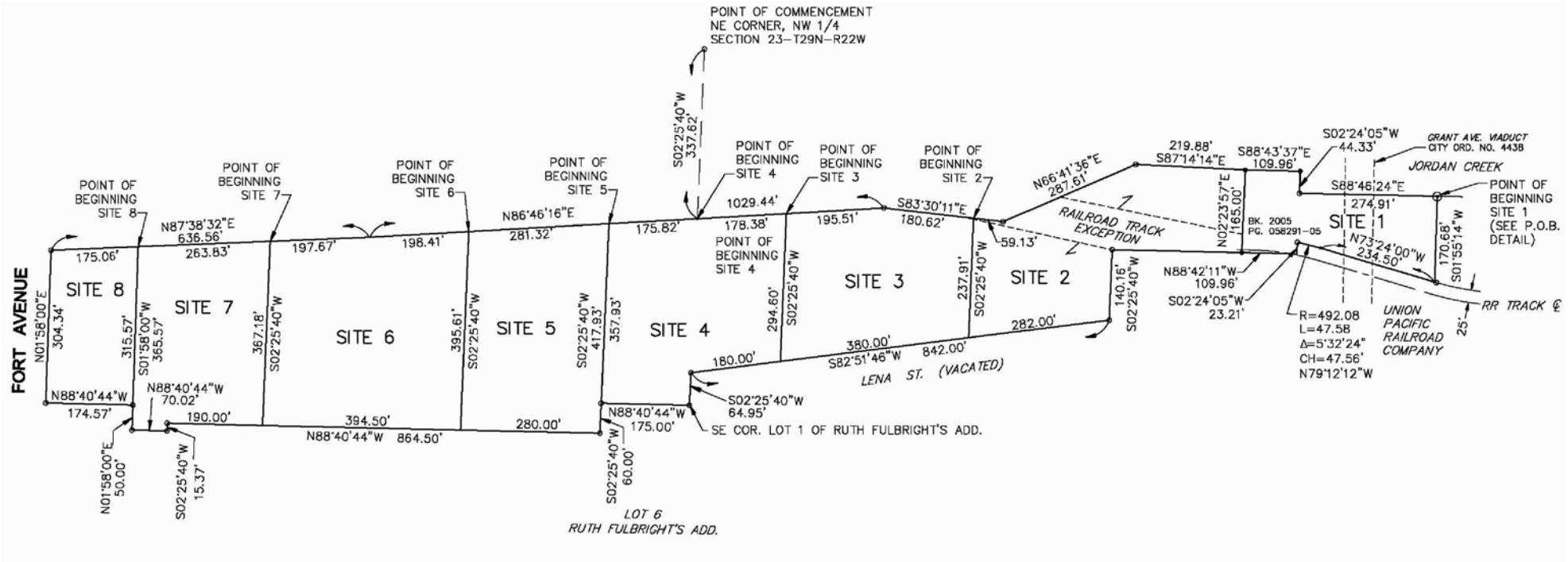

N

DIAGRAM IS INTENDED FOR GENERAL USE ONLY, AND IS NOT FOR CONSTRUCTION PURPOSES. LOCATIONS ARE APPROXIMATE.

FIGURE 2 - JORDAN VALLEY WEST MEADOW'S SURVEY MAP
WEST MEADOWS SITE #1

JORDAN VALLEY CREEK REDEVELOPMENT AREA
SPRINGFIELD, GREENE COUNTY, MISSOURI

Project Mngr: ADS	Terracon	Scale: NOT TO SCALE	
Designed By: ADS	13910 W. 96th Terrace	Date: 2/16/10	
Checked By: ADS	Lenexa, Kansas 66215	Project No. B5097016A	
Approved By: ADS	Phone: (913) 492-7777	File Name: B7016F2.dwg	
Drawn By: DBM	Fax: (913) 492-7443	Figure No. 2	

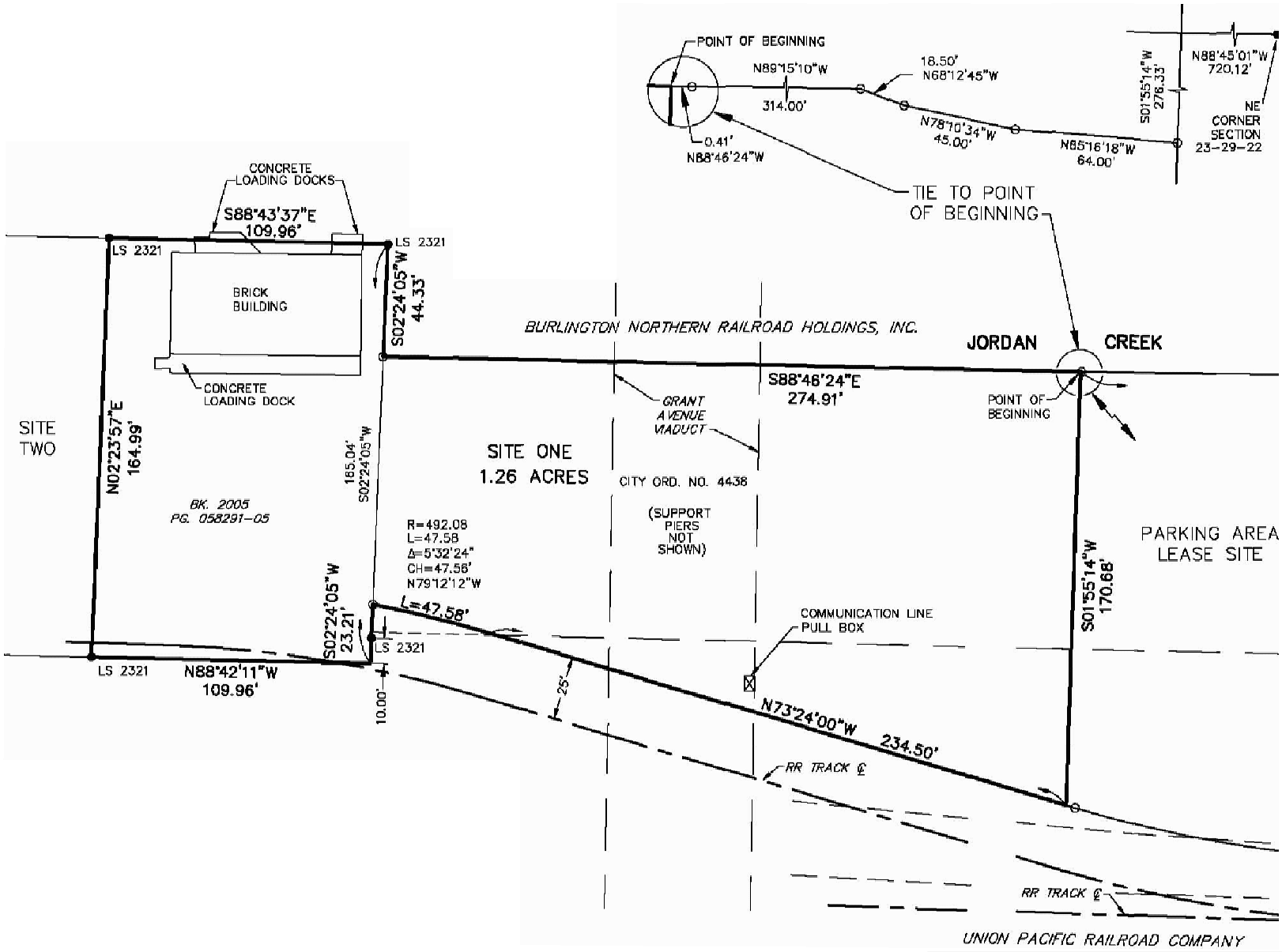

N

FIGURE 3 - SITE #1 SURVEY MAP
WEST MEADOWS SITE #1

JORDAN VALLEY CREEK REDEVELOPMENT AREA
SPRINGFIELD, GREENE COUNTY, MISSOURI

Project Mngr:	ADS	Terracon	Scale:	NOT TO SCALE
Designed By:	ADS	13910 W. 96th Terrace Lenexa, Kansas 66215 Phone: (913) 492-7777 Fax: (913) 492-7443	Date:	2/16/10
Checked By:	ADS		Project No.	B5097016A
Approved By:	ADS		File Name:	B7016F3.dwg
Drawn By:	DBM		Figure No.	3

DIAGRAM IS INTENDED FOR GENERAL USE ONLY, AND IS NOT FOR CONSTRUCTION PURPOSES. LOCATIONS ARE APPROXIMATE.

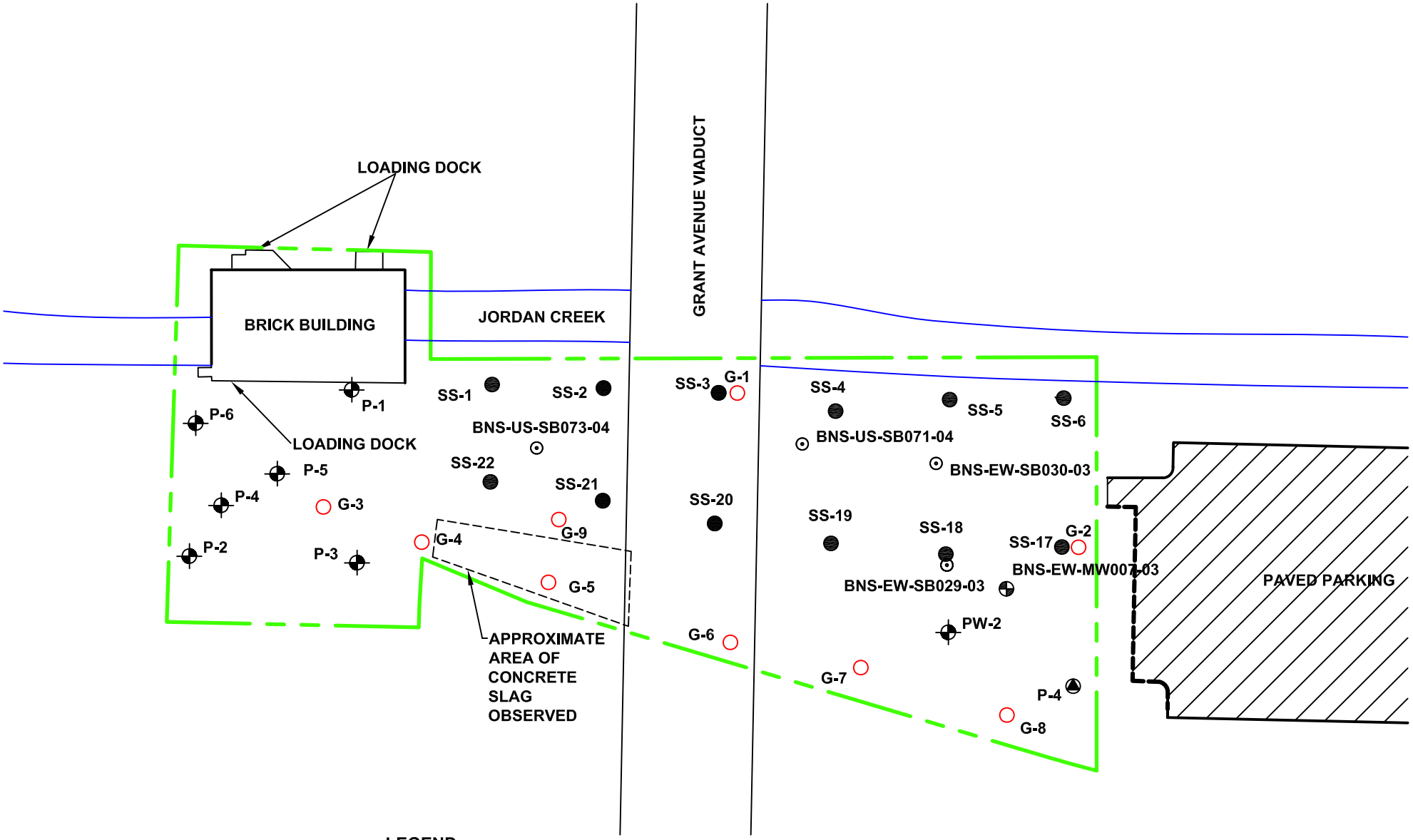

0 30' 60' 120'

LEGEND

- DEEP PROBE LOCATION (TERRACON)
- MONITORING WELL LOCATION (TERRACON)
- BTA SOIL BORING LOCATION
- MONITORING WELL LOCATION
- BTA SURFACE SOIL SCREENING LOCATION (METALS)
- CHARACTERIZATION FOR REMEDIAL DESIGN SAMPLE LOCATION
- APPROXIMATE SITE BOUNDARY

N

DIAGRAM IS INTENDED FOR GENERAL USE ONLY, AND IS NOT FOR CONSTRUCTION PURPOSES. LOCATIONS ARE APPROXIMATE.

FIGURE 4 - PREVIOUS SAMPLE LOCATION MAP
WEST MEADOWS SITE #1
JORDAN VALLEY CREEK REDEVELOPMENT AREA
SPRINGFIELD, GREENE COUNTY, MISSOURI

Project Mngr:	EJG	Scale:	1" = 60'
Designed By:	ADS	Date:	2/16/10
Checked By:	ADS	Project No.	B5097016A
Approved By:	ADS	File Name:	B7016F4.dwg
Drawn By:	DBM	Figure No.	4

Terracon
13910 W. 96th Terrace
Lenexa, Kansas 66215
Phone: (913) 492-7777
Fax: (913) 492-7443

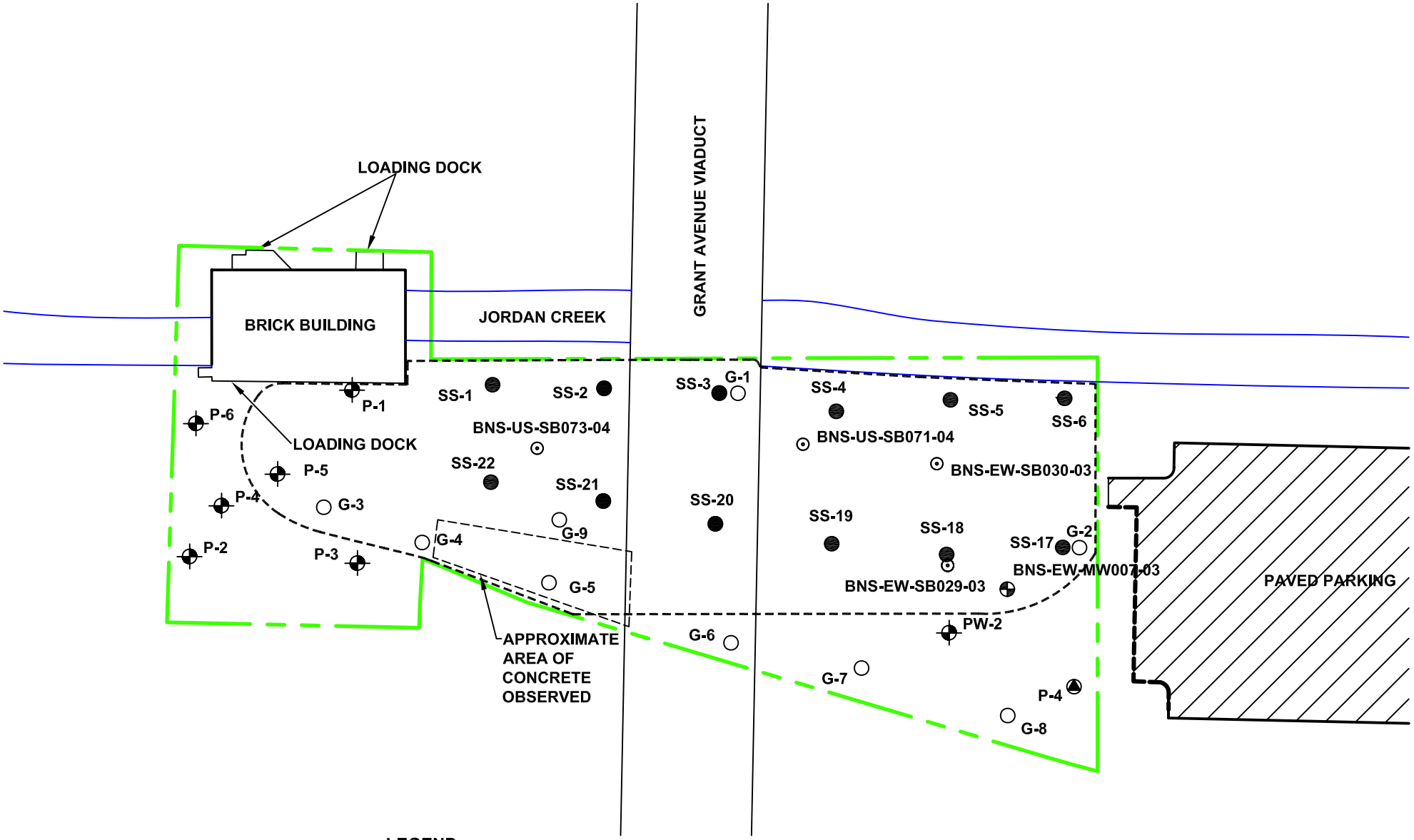

0 30' 60' 120'

LEGEND

- DEEP PROBE LOCATION (TERRACON)
- MONITORING WELL LOCATION (TERRACON)
- BTA SOIL BORING LOCATION
- MONITORING WELL LOCATION
- BTA SURFACE SOIL SCREENING LOCATION (METALS)
- CHARACTERIZATION FOR REMEDIAL DESIGN SAMPLE LOCATION
- APPROXIMATE SITE BOUNDARY
- PROPOSED EXCAVATION BOUNDARY

N

DIAGRAM IS INTENDED FOR GENERAL USE ONLY, AND IS NOT FOR CONSTRUCTION PURPOSES. LOCATIONS ARE APPROXIMATE.

FIGURE 5 - EXCAVATION DIAGRAM
(BASED ON RESIDENTIAL EXCEEDANCES)
WEST MEADOWS SITE #1
JORDAN VALLEY CREEK REDEVELOPMENT AREA
SPRINGFIELD, GREENE COUNTY, MISSOURI

Project Mngr:	EJG	Scale:	1" = 60'
Designed By:	ADS	Date:	2/16/10
Checked By:	ADS	Project No.	B5097016A
Approved By:	ADS	File Name:	B7016F5.dwg
Drawn By:	DBM	Figure No.	5

Terracon
13910 W. 96th Terrace
Lenexa, Kansas 66215
Phone: (913) 492-7777
Fax: (913) 492-7443

APPENDIX B

Site Specific Data Summary Tables

APPENDIX B -- TABLE B-1
SURFACE SOIL - METALS
WEST MEADOWS - SITE 1
SPRINGFIELD, MISSOURI

Sample results and MRBCA RBTLs are reported in milligrams per kilogram (mg/kg)

Updated Sample Location ID	Original Sample Location ID	Sample Depth (ft bgs)	Arsenic	Barium	Cadmium	Chromium	Lead	Mercury	Selenium	Silver
BNS-EW-SB030-03	GSB-10-1	0-2.5	13.3	104	19.2	12.5	712	3.75	17.2	ND
SS-1	--	Surface	ND	ND	ND	ND	301	ND	ND	ND
SS-2	--	Surface	ND	ND	ND	ND	425	ND	ND	ND
SS-3	--	Surface	ND	ND	ND	ND	848	* See G-1	ND	ND
SS-4	--	Surface	13.6	112	9.23	23.8	468	0.466	3.62	1.03
SS-5	--	Surface	ND	ND	ND	ND	857	ND	ND	ND
SS-6	--	Surface	13	175	19.5	26	748	1.2	3.63	1.04
SS-17	--	Surface	ND	ND	ND	ND	496	* See G-2	ND	ND
SS-18	--	Surface	ND	ND	ND	ND	439	ND	ND	ND
SS-19	--	Surface	ND	ND	ND	ND	207	ND	ND	ND
SS-20	--	Surface	7.96	253	9.63	25.3	472	0.619	3.58	1.02
SS-21	--	Surface	ND	ND	ND	ND	518	ND	ND	ND
SS-22	--	Surface	9.73	135	10	22.5	629	0.689	3.55	1.01
UP PW-2	PW-2	0-5	5.4	190	0.86	19	33	0.11	ND	ND
UP P-4	P-4	0-3	34	67	1.5	12	230	0.27	2	ND
CH P-1	P-1	0-3	4.6	85	10	12	320	0.2	ND	ND
CH P-2	P-2	0-3	ND	240	1.4	17	32	0.061	5.2	ND
CH P-3	P-3	0-3	ND	110	8.6	24	79	0.22	ND	ND
CH P-4	P-4	0-3	ND	140	3.1	20	59	0.052	ND	ND
CH P-5	P-5	0-3	5.3	70	14	12	960	0.38	ND	ND
CH P-6	P-6	0-3	2.7	88	15	14	230	0.26	ND	ND
G-1	G-1	0-1	NA	NA	NA	NA	NA	0.26	NA	NA
G-2	G-2	0-1	NA	NA	NA	NA	NA	1.2	NA	NA
G-3	G-3	0-1	60	NA	26	NA	1100	4.4	NA	NA
G-4	G-4	0-1	12	NA	9.9	NA	660	1.6	NA	NA
G-5	G-5	0-0.3	6.6	NA	110	NA	200	0.088	NA	NA
G-6	G-6	0-1	12	NA	4.5	NA	200	0.17	NA	NA
G-7	G-7	0-1	9.6	NA	1.3	NA	79	0.073	NA	NA
G-8	G-8	0-1	ND	NA	1.3	NA	100	0.11	NA	NA
G-9	G-9	1-1.3	3.7	NA	6.4	NA	430	0.2	NA	NA
Maximum Detection			60	253	110	26	1100	4.4	17.2	1.04
MRBCA DTLs For All Soil Types			3.89	2040	9.31	74600	3.74	2.19	6.27	16.2
Exceeds DTLs?			Yes	No	Yes	No	Yes	Yes	Yes	No
Detection Average			13.34	136.08	14.07	18.47	422.57	0.74	5.54	1.03
Tier 1 RBTLs Residential Land Use (Current and Future Use) Soil Type 2 Ingestion, Inhalation (Vapor Emissions and Particulates), and Dermal Contact			3.89	15000	16.8	74600	260	46.3	380	374
Maximum Exceeds Tier 1 RBTLs?			Yes	No	Yes	No	Yes	No	No	No
Tier 1 RBTLs Non-Residential Land Use (Current and Future Use) Soil Type 2 Ingestion, Inhalation (Vapor Emissions and Particulates), and Dermal Contact			15.9	181000	74.8	472000	660	630	4780	4480
Maximum Exceeds Tier 1 RBTLs?			Yes	No	Yes	No	Yes	No	No	No
Average Exceeds Non-Residential Tier 1 RBTLs?			No	No	No	No	No	No	No	No
Tier 1 RBTLs Construction Worker Soil Type 2 Ingestion, Inhalation and Dermal Contact			654	439000	2810	521000	N/A	21.6	12800	10600
Maximum Exceeds Tier 1 RBTLs?			No	No	No	No	No	No	No	No

ND = Not Detected at concentrations above the laboratory reporting limits.
NA = Not Analyzed or Reported.
N/A = Not Applicable - No cleanup level has been established or pathway is incomplete.
BOLD = Concentration may not be indicative of actual site conditions - field screening result.
* = SS-3 and SS-17 were XRF results; samples G-1 and G-2 collected at these locations and laboratory analyzed.

APPENDIX B -- TABLE B-2
SURFACE SOIL - SVOCS
WEST MEADOWS - SITE 1
SPRINGFIELD, GREENE COUNTY, MISSOURI
Sample results and MRBCA RBTLs are reported in milligrams per kilogram (mg/kg)

Updated Sample Location ID	Original Sample Location ID	Original Sample Location/ Depth (ft bgs)	Acenaphthene	Acenaphthylene	Anthracene	Benzo(a)anthracene	Benzo(a)pyrene	Benzo(b)fluoranthene	Benzo(g,h,i)perylene	Benzo(k)fluoranthene	Carbazole	Chrysene	Dibenzo(a,h)anthracene	Fluoranthene	Fluorene	Indeno(1,2,3-cd)pyrene	2-Methylnaphthalene	Naphthalene	Phenanthrene	Pyrene
BNS-US-SB071-04	2410-41	SB-25 (0-2')	ND	ND	ND	ND	ND	ND	ND	ND	NA	ND	ND	1.6	ND	ND	1.7	ND	3.2	1.5
BNS-US-SB073-04	2410-43	SB-27 (0-2')	ND	ND	15	14	11	8.1	5.6	9.2	NA	13	ND	30	12	6.1	4.8	14	46	27
BNS-EW-SB030-03	GSB-10-1	0-2.5	0.49	0.54	1.3	4.4	4.7	9.1	1.8	ND	NA	4.3	0.77	5.9	0.45	1.7	ND	ND	4.6	7.7
SS-1	SS-1	0 to 6 inches	ND	ND	ND	0.81	0.86	1.1	ND	0.92	NA	1.1	ND	2.1	ND	0.35	ND	ND	1.2	1.3
UP PW-2	PW-2	0-5	ND	ND	ND	ND	ND	ND	ND	ND	NA	ND	ND	ND	ND	ND	NA	ND	0.1	ND
UP P-4	P-4	0-3	0.22	ND	0.39	1.3	1.2	ND	0.26	2.2	NA	1.1	ND	2.6	0.29	0.26	NA	0.79	2.6	2.9
CH P-1	P-1	0-3	ND	ND	ND	0.84	0.64	0.86	ND	ND	NA	0.69	ND	1.3	ND	ND	NA	0.49	1.2	1.3
CH P-2	P-2	0-3	ND	ND	ND	ND	ND	ND	ND	ND	NA	ND	ND	ND	ND	ND	NA	ND	ND	ND
C-1	C-1	0-1 feet	0.2	0.074	0.1	1	1.2	2	ND	0.81	NA	0.84	ND	2.5	0.068	ND	NA	0.11	1.2	1.7
C-2	C-2	0-1 feet	0.46	0.22	0.11	1.4	1	1.9	ND	ND	NA	1.2	ND	2.9	0.21	ND	NA	0.3	2.2	1.9
Maximum Detection			0.49	0.54	15	14	11	9.1	5.6	9.2	NA	13	0.77	30	12	6.1	4.8	14	46	27
MRBCA DTLs For All Soil Types			174	175	3060	6.12	0.62	6.19	1720	62	13.3	599	0.62	2280	211	3.77	7.55	0.325	158	1500
Exceeds DTLs?			No	No	No	Yes	Yes	Yes	No	No	No	No	Yes	No	No	Yes	No	Yes	No	No
Detection Averages			0.34	0.28	3.38	3.39	2.94	3.84	2.55	3.28	NA	3.18	0.77	6.11	2.60	2.10	3.25	3.14	6.92	5.66
Tier 1 RBTLs Residential Land Use (Current and Future Use) Soil Type 1 Ingestion, Inhalation (Vapor Emissions and Particulates), and Dermal Contact			3130	4180	15700	6.2	0.62	6.19	1720	62	242	599	0.62	2280	2200	3.77	273	36.3	2170	1710
Maximum Exceeds Tier 1 Residential			No	No	No	Yes	Yes	Yes	No	No	No	No	Yes	No	No	Yes	No	No	No	No
Tier 1 RBTLs Non-Residential Land Use (Current and Future Use) Soil Type 2 Ingestion, Inhalation (Vapor Emissions and Particulates), and Dermal Contact			30700	53800	154000	21.1	2.11	21	16500	211	851	2020	2.11	21800	21100	12.8	3590	119	27500	16400
Maximum Exceeds Tier 1 RBTL?			No	No	No	No	Yes	No	No	No	No	No	No	No	No	No	No	No	No	No
Average Exceeds Tier 1 Non-Residential			No	No	No	No	Yes	No	No	No	No	No	No	No	No	No	No	No	No	No
Tier 1 RBTLs Construction Worker Soil Type 2 Ingestion, Inhalation and Dermal Contact			31300	44700	164000	1190	119	1150	37200	11900	42600	74800	119	45100	31200	724	1210	215	30100	34400
Maximum Exceeds Tier 1 RBTL?			No	No	No	No	No	No	No	No	No	No	No	No	No	No	No	No	No	No
Average Exceeds Tier 1 Construction Worker RBTLs?			No	No	No	No	No	No	No	No	No	No	No	No	No	No	No	No	No	No

ND = Not Detected at concentrations above the laboratory reporting limits.
NA = Not Analyzed or Reported.
N/A = Not Applicable - No cleanup level has been established or pathway is incomplete.
C-1 and C-2 are coposite samples from the eastern and western portions of the site.

APPENDIX B -- TABLE B-2
SURFACE SOIL - SVOCS
WEST MEADOWS - SITE 1
SPRINGFIELD, GREENE COUNTY, MISSOURI
Sample results and MRBCA RBTLs are reported in milligrams per kilogram (mg/kg)

Updated Sample Location ID	Original Sample Location ID	Original Sample Location/ Depth (ft bgs)	Acenaphthene	Acenapthylene	Anthracene	Benzo(a)anthracene	Benzo(a)pyrene	Benzo(b)fluoranthene	Benzo(g,h,i)perylene	Benzo(k)fluoranthene	Carbazole	Chrysene	Dibenzo(a,h)anthracene	Fluoranthene	Fluorene	Indeno(1,2,3-cd)pyrene	2-Methylnaphthalene	Naphthalene	Phenanthrene	Pyrene
BNS-US-SB071-04	2410-41	SB-25 (0-2')	ND	ND	ND	ND	ND	ND	ND	ND	NA	ND	ND	1.6	ND	ND	1.7	ND	3.2	1.5
BNS-US-SB073-04	2410-43	SB-27 (0-2')	ND	ND	15	14	11	8.1	5.6	9.2	NA	13	ND	30	12	6.1	4.8	14	46	27
BNS-EW-SB030-03	GSB-10-1	0-2.5	0.49	0.54	1.3	4.4	4.7	9.1	1.8	ND	NA	4.3	0.77	5.9	0.45	1.7	ND	ND	4.6	7.7
SS-1	SS-1	0 to 6 inches	ND	ND	ND	0.81	0.86	1.1	ND	0.92	NA	1.1	ND	2.1	ND	0.35	ND	ND	1.2	1.3
UP PW-2	PW-2	0-5	ND	ND	ND	ND	ND	ND	ND	ND	NA	ND	ND	ND	ND	ND	NA	ND	0.1	ND
UP P-4	P-4	0-3	0.22	ND	0.39	1.3	1.2	ND	0.26	2.2	NA	1.1	ND	2.6	0.29	0.26	NA	0.79	2.6	2.9
CH P-1	P-1	0-3	ND	ND	ND	0.84	0.64	0.86	ND	ND	NA	0.69	ND	1.3	ND	ND	NA	0.49	1.2	1.3
CH P-2	P-2	0-3	ND	ND	ND	ND	ND	ND	ND	ND	NA	ND	ND	ND	ND	ND	NA	ND	ND	ND
C-1	C-1	0-1 feet	0.2	0.074	0.1	1	1.2	2	ND	0.81	NA	0.84	ND	2.5	0.068	ND	NA	0.11	1.2	1.7
C-2	C-2	0-1 feet	0.46	0.22	0.11	1.4	1	1.9	ND	ND	NA	1.2	ND	2.9	0.21	ND	NA	0.3	2.2	1.9
Maximum Detection			0.49	0.54	15	14	11	9.1	5.6	9.2	NA	13	0.77	30	12	6.1	4.8	14	46	27
MRBCA DTLs For All Soil Types			174	175	3060	6.12	0.62	6.19	1720	62	13.3	599	0.62	2280	211	3.77	7.55	0.325	158	1500
Exceeds DTLs?			No	No	No	**Yes**	**Yes**	**Yes**	**No**	No	No	No	**Yes**	No	No	**Yes**	No	**Yes**	No	No
Detection Averages			0.34	0.28	3.38	3.39	2.94	3.84	2.55	3.28	NA	3.18	0.77	6.11	2.60	2.10	3.25	3.14	6.92	5.66
Tier 1 RBTLs Residential Land Use (Current and Future Use) Soil Type 1 Ingestion, Inhalation (Vapor Emissions and Particulates), and Dermal Contact			3130	4180	15700	6.2	0.62	6.19	1720	62	242	599	0.62	2280	2200	3.77	273	36.3	2170	1710
Maximum Exceeds Tier 1 Residential			No	No	No	**Yes**	**Yes**	**Yes**	No	No	No	No	**Yes**	No	No	**Yes**	No	No	No	No
Tier 1 RBTLs Non-Residential Land Use (Current and Future Use) Soil Type 2 Ingestion, Inhalation (Vapor Emissions and Particulates), and Dermal Contact			30700	53800	154000	21.1	2.11	21	16500	211	851	2020	2.11	21800	21100	12.8	3590	119	27500	16400
Maximum Exceeds Tier 1 RBTL?			No	No	No	No	**Yes**	No	No	No	No	No	No	No	No	No	No	No	No	No
Average Exceeds Tier 1 Non-Residential			No	No	No	No	**Yes**	No	No	No	No	No	No	No	No	No	No	No	No	No
Tier 1 RBTLs Construction Worker Soil Type 2 Ingestion, Inhalation and Dermal Contact			31300	44700	164000	1190	119	1150	37200	11900	42600	74800	119	45100	31200	724	1210	215	30100	34400
Maximum Exceeds Tier 1 RBTL?			No	No	No	No	No	No	No	No	No	No	No	No	No	No	No	No	No	No
Average Exceeds Tier 1 Construction Worker RBTLs?			No	No	No	No	No	No	No	No	No	No	No	No	No	No	No	No	No	No

ND = Not Detected at concentrations above the laboratory reporting limits.
NA = Not Analyzed or Reported.
N/A = Not Applicable - No cleanup level has been established or pathway is incomplete.
C-1 and C-2 are coposite samples from the eastern and western portions of the site.

APPENDIX C

Missouri Department of Natural Resources Quality Assurance Project Plan for Brownfields/Voluntary Cleanup Program Sites (QAPP)

QUALITY ASSURANCE PROJECT PLAN FOR BROWNFIELDS/VOLUNTARY CLEANUP PROGRAM SITES

Prepared by the
Missouri Department of Natural Resources
Division of Environmental Quality
Hazardous Waste Program
Brownfields/Voluntary Cleanup Section

Missouri Department of Natural Resources
P.O. Box 176
Jefferson City, MO 65102-0176

A. PROJECT MANAGEMENT ELEMENTS

A.1 TITLE AND APPROVAL SHEET

Brownfields/Voluntary Cleanup Program
Quality Assurance Project Plan
Missouri Department of Natural Resources
Division of Environmental Quality

DEPARTMENT APPROVALS

John Madras Division Quality Assurance Manager	9/26/05 Date
Ronald Zell Director, Hazardous Waste Program	9/22/05 Date
Carey Bridges BVCP Quality Assurance Project Officer, HWP	9/19/05 Date

CONTRACTOR APPROVALS

Tim A. Rogers for Dave Koch Director, Contractor	May 13, 2009 Date
Eric Gorman Project Manager, Contractor	May 13, 2009 Date
Rory D. Stuke Project Field Superintendent, Contractor	5/13/09 Date
Eric Gorman & Dave Koch QA/QC Manager, Contractor	May 13, 2009 Date

A.2 TABLE OF CONTENTS

PROJECT MANAGEMENT 1
A.1 TITLE AND APPROVAL SHEET 1
A.2. DISTRIBUTION LIST 3
A.3 PROJECT/TASK ORGANIZATION 3
A.4 PROBLEM DEFINITION/BACKGROUND 4
A.5 PROJECT/TASK DESCRIPTION 5
A.6 QUALITY OBJECTIVES AND CRITERIA 7
A.7 SPECIAL TRAINING/CERTIFICATION 8
A.8 DOCUMENTS AND RECORDS 8

DATA GENERATION AND ACQUISITION 9
B.1 SAMPLING PROCESS DESIGN 9
B.2 SAMPLING METHODS 10
B.3 SAMPLE HANDLING AND CUSTODY 10
B.4 ANALYTICAL METHODS 10
B.5 QUALITY CONTROL 11
B.6 INSTRUMENT/EQUIPMENT TESTING, INSPECTION AND MAINTENANCE 11
B.7 INSTRUMENT/EQUIPMENT CALLIBRATION AND FREQUENCY 12
B.8 INSPECTION/ACCEPTANCE OF SUPPLIES AND CONSUMABLES 12
B.9 NON-DIRECT MEASUREMENTS 12
B.10 DATA MANAGEMENT 12

ASSESSMENT AND OVERSIGHT 13
C.1 ASSESSMENTS AND RESPONSE ACTIONS 13
C.2 REPORTS TO MANAGEMENT 14

DATA VALIDATION AND USABILITY 14
D.1 DATA REVIEW, VERIFICATION AND VALIDATION 14
D.2 VERIFICATION AND VALIDATION METHODS 14
D.3 RECONCILIATION WITH USER REQUIREMENTS 15

REFERENCES 16

APPENDIX A: LISTING OF ACRONYMS 17

APPENDIX B: ANALYTICAL REQUIREMENTS 19

A.3 DISTRIBUTION LIST

Missouri Department of Natural Resources (MDNR)
John Madras – Quality Assurance Manager, Environmental Policy Director, Division of Environmental Quality (DEQ)

Hazardous Waste Program (HWP)
Bob Geller – Director
Jim Belcher – Environmental Manager, Brownfields/Voluntary Cleanup Section
Carey Bridges – Quality Assurance Project Officer, BVCP
Project Managers – Brownfields/Voluntary Cleanup Section

Contractor/Consultant (contractor)
Director - Contractor
Project Manager–Contractor
Project Field Superintendent –Contractor
Contractor/Consultant/Laboratory – Quality Assurance Project Plan Coordinator

A.4 PROJECT/TASK ORGANIZATION

The following list identifies key individuals and organizations participating in this project, and discusses their specific roles and responsibilities as they pertain to this Quality Assurance Project Plan (QAPP).

Project Manager - Brownfields/Voluntary Cleanup Section, HWP
Responsibilities: Oversight of site-specific activities as they relate to this QAPP, including correspondence, communication and scheduling. Review and approve plans, reports, and data to ensure that site-specific activities conducted pursuant to this QAPP meet project-specific Data Quality Objectives (DQOs).

John Madras – Environmental Policy Director, DEQ
Responsibilities: Monitors the overall Quality Assurance (QA) operations for the division. Develops and maintains the Quality Management Plan (QMP). Reviews and approves all QAPPs for the division.

Project Manager –Contractor
Responsibilities: Supervise and schedule field staff conducting sample collection and site assessment activities. Assures that staff are qualified and trained to perform the work, familiar with the required Standard Operating Procedures (SOP), including those related to Quality Assurance/Quality Control (QA/QC), and have the equipment necessary to perform the work. Reviews reports generated by staff for completeness, clarity and accuracy. Prepare formal reports for BVCP staff review and approval.

Project Field Superintendent - Contractor
Responsibilities: Prepare and/or implement site-specific sampling plans to collect environmental samples according to contractor SOPs at potential and/or confirmed hazardous substance sites. Conduct sample collection by appropriate

methods to provide data of sufficient quality. Prepare and/or implement health and safety plans for investigations conducted by the contractor at potential and/or confirmed hazardous substance sites. May prepare formal reports of sampling investigations for BVCP staff to evaluate.

QA/QC Manager - Contractor
Responsibilities: Reviews site-specific QAPPs and other documents as needed to ensure quality data. Performs field audits of contractor staff who conduct sampling activities in order to verify that staff are following the contractor SOPs for environmental data collection. Prepares audit reports summarizing procedures used and makes recommendations for improvement, if necessary.

Contractor/Consultant/Laboratory – Quality Assurance Project Plan Coordinator
Responsibilities: Ensures that appropriate analytical methods, Laboratory SOPs, QA/QC procedures, documentation, and training are implemented and routinely followed by all supervisory and technical staff of the contractor. Utilizes data review checklists and QC charts for both precision and accuracy data in the data quality review process. Conducts reviews of data files following review and approval by Laboratory supervisory staff.

Director - Contractor
Responsibilities: Ensures overall validation and final approval of data generated by the contractor. Assists as appropriate in the performance auditing of all activities performed by contractor personnel.

A.5 PROBLEM DEFINITION/BACKGROUND

The Brownfields/Voluntary Cleanup Program, administered by the Missouri Department of Natural Resources Hazardous Waste Program's Brownfields/Voluntary Cleanup Section (BVCP), provides voluntary parties with technical assistance and oversight for the investigation and cleanup of properties contaminated with hazardous substances. The goal of the BVCP is to clean up contaminated properties and bring them back into productive use.

Environmental assessments of commercial and industrial property are part of many real estate transactions and often are required by lenders and buyers as a result of the liability provisions of the federal Comprehensive Environmental Response, Compensation, and Liability Act (CERCLA), or Superfund law. If contamination is found, property owners or other interested parties often want not only to clean up the property, but also to obtain a certificate of completion or "clean letter" from the state, which provides a measure of environmental liability protection. Hazardous substance contamination is not always regulated under state and federal laws such as Superfund, the Resource Conservation and Recovery Act (RCRA), or state petroleum storage tank regulations. The contamination may be of a type or concentration that does not warrant enforcement action and may not require cleanup under existing regulations. The BVCP may be the only program with the authority to provide oversight of the cleanup and a certification of completion.

The BVCP can provide guidance so that the cleanup satisfies any applicable state and federal regulations and also provides written assurance when the project is complete. Missouri's Hazardous Substance Environmental Remediation (Voluntary Cleanup Program) Regulations (10 CSR 25-15.010) in accordance with sections 260.565 – 260.575, RSMo, provide the Hazardous Waste Program's Brownfields/Voluntary Cleanup Section with the resources and the authority to provide project oversight and completion letters. Oversight costs are paid to the department by the participant. By a memorandum of agreement with the U.S. Environmental Protection Agency (EPA), Region 7, the EPA will not pursue federal action with regard to the contamination addressed at the site once the BVCP issues a certificate of completion.

The Missouri Department of Natural Resources operates under its Quality Management Plan (QMP) when collecting or overseeing the collection of environmental sampling data. This plan requires that any subgrantees, contractors, or, in some cases, the regulated community, who generate environmental data develop QAPPs or other appropriate quality management tools. The QMP covers all intramural and extramural monitoring and measurement activities that generate and process environmental data for use by the department, including activities at sites participating in the BVCP.

This QAPP is generic in that it applies to several site-specific projects under the oversight of the BVCP. It is ongoing in that the projects are conducted continuously. A site-specific work plan detailing site activities will be submitted to the BVCP Project Manager for approval prior to any work conducted under the oversight of the BVCP. Any deviations from or supplemental activity to the generic QAPP will be documented in a Site-Specific Quality Assurance Project Plan Addendum (SSQA).

A.6 PROJECT/TASK DESCRIPTION

When a site enters the program, the BVCP reviews existing site assessment reports and determines whether or not additional investigation or cleanup is required to meet state standards. The site investigation and any necessary cleanup are conducted by the applicant or their consultants and contractors. Site assessment reports, remedial action plans and a final report are submitted to the BVCP for review and approval. When the BVCP is satisfied that the cleanup has met the objectives, the department provides the applicant with a Certification of Completion or "No Further Action Letter" signed by the Director of the Hazardous Waste Program. Applicants pay for the BVCP's oversight costs, which are calculated on an hourly basis. Participation in the program is voluntary and applicants may withdraw at any time.

Activities that may be conducted under this QAPP and with the oversight of the BVCP include site characterization, remedial action and risk management. These activities will be documented through work plans for site characterization, characterization reports, risk assessment reports, remedial action plans (RAP), risk management plans (RMP), and final reports, all submitted to the BVCP for review and approval. The following include the necessary components for work plans to conduct environmental data collection submitted for BVCP approval and the necessary QA/QC documentation to be submitted after data collection.

A.6.1 Work Plans For Site Characterization

The contractor will submit the written site-specific work plan to BVCP for review and approval prior to implementation. These work plans should include a sampling and analysis plan, a field sampling plan, a health and safety plan, signature page and reference to this generic QAPP and a SSQA if applicable. The work plan will provide general site information, describe the number, type, and location of samples to be collected (included on a site sketch) as well as analytical parameters and methods requested for each sample.

A.6.2 Characterization Reports

The contractor will submit the written site-specific characterization report, including risk assessment reports, to the BVCP upon completion of site characterization activities. These reports should include field QA/QC documentation requirements and laboratory QA/QC documentation requirements as described in Section A.8 Documents and Records.

A.6.3 Remedial Action Plans/Risk Management Plans

If the RAP or RMP involves environmental data collection such as further site characterization, confirmatory samples following remedial activities, or monitoring, then the RAP/RMP shall be subject to this QAPP. The contractor will submit the written site-specific RAP/RMP to BVCP for review and approval prior to implementation. These plans should include a sampling and analysis plan, a field sampling plan, documentation of the health and safety plan, signature page and reference to this generic QAPP and a SSQA if applicable. The plan will provide general site information, describe the number, type, and location of samples to be collected (included on a site sketch) as well as analytical parameters requested for each sample.

If the RAP/RMP does not involve environmental sampling, then data QA/QC would not be a component.

A.6.4 Remedial Action/Risk Management Reports

If the RAP/RMP involves environmental sampling, then the contractor will submit to the BVCP a written site-specific report that includes field QA/QC documentation requirements and laboratory QA/QC documentation requirements as described in Section A.8 Documents and Records.

A.6.5 Modifications to the Work Plans

BVCP will have the final approval of all individual components of the written work plans revised as specified herein and reserves the right to require modifications, deletions, and or additional elaboration to the written work plans and reports as BVCP deems necessary.

A.6.5.1 BVCP requested changes

If BVCP determines that modifications to the written work plan are necessary or desired, the agency will document the requested changes to the contractor in writing. Such changes may include the need for additional sampling at the site. Based on the written instructions provided by BVCP, the contractor will revise the written work plan.

A.6.5.2 Contractor requested changes

If the contractor determines that modifications to the written work plan are necessary, the contractor will submit a written request to BVCP for changes. The written request will include the reason for the modification and will detail the contractor's proposed changes to the written work plan. BVCP will review the written request of the contractor and send written notice of approval or disapproval of the request to the contractor.

A.6.5.3 Field Deviations from the Work Plan

Changes in site conditions between the time of the site reconnaissance and the on-site sampling visit and the visual appearance of the substance at the time of sampling may determine the actual number and locations of samples collected. The deviations or changes will be documented in the final report prepared by the contractor and submitted to the BVCP.

A.7 DATA QUALITY OBJECTIVES AND CRITERIA

Data Quality Objectives are qualitative and quantitative statements that specify the purpose, quality, and/or quantity of the environmental data required to support management and remedial decisions at the site. DQOs are predicated in accordance with the anticipated end uses of the data that is to be collected. Data collected typically will be used to meet the following DQOs:

- Determine if there is an immediate threat to public health or the environment.
- Locate and identify potential sources of contamination.
- Characterize the extent of impact from contamination.
- Determine if there is a long-term risk from exposure to the site.
- Determine potential remediation and long-term stewardship strategies (if necessary).

When analyzing environmental samples, all measurements will be made so that results are reflective of the medium and conditions being measured. The level of detail and data quality needed will vary with the intended use of the data. DQOs typically are assessed by evaluating the precision, accuracy, representativeness, completeness, and comparability of all aspects of the data collection process, defined as follows:

- **Precision**: a measure of the reproducibility of analytical results.
- **Accuracy**: a measure of the bias that exists in a measurement system.
- **Representativeness**: degree that sampling data accurately and precisely depicts selected characteristics such as parameter variations at a sampling point or an environmental condition.

- **Completeness**: measure of the amount of valid data obtained from a measurement system compared to the amount that was expected to be obtained under "normal" conditions.
- **Comparability**: degree of confidence with which one data set can be compared to another.

To assess if environmental measurements are of an appropriate quality, the general requirements above will be examined and compared to agency-recommended parameters when available. Calculation of precision and accuracy should be specified in the site-specific work plan and/or SSQA. Samples should be collected in a manner so they are representative of both the chemical composition and physical state of the sample at the time of sampling. To ensure comparability, all data will be reported as ^{o} Celsius (flash point), pH units, µg/l or mg/l for water, liquids, µg/kg or mg/kg for soil, sediment or other solids, and mg/m^3 for air. Comparability is further addressed by using appropriate field and laboratory methods that are consistent with current standards of practice as approved by EPA.

A.8 SPECIAL TRAINING/CERTIFICATION

Sample collectors are required to successfully complete a 40-hour Hazardous Waste Operations and Emergency Response (HAZWOPER) site safety course in accordance with 40 CFR Part 311, which references 29 CFR 1910.120. Staff are also expected to be trained on sampling for hazardous materials as well as read and be familiar with applicable SOPs, the generic QAPP, the site-specific work plan(s) and the SSQA prior to performing actual sample collection.

Specific training requirements may be necessary for personnel operating field analytical or sampling equipment or specialized equipment, such as an X-ray Fluorescence (XRF) analyzer or geophysical instruments. Manufacturer's requirements and recommendations should be followed.

The contractor will ensure and provide for the protection of the personal safety and health of all its workers on site, including the selection, provision, testing, decontamination, and disposal of all Personal Protective Equipment (PPE) and any required medical monitoring. The contractor will comply with all applicable worker safety and health laws and regulations. At all times during performance of services, the contractor will exercise reasonable professional judgement regarding safety and will use professional judgement as a criterion for cessation of services for safety reasons.

A.9 DOCUMENTS AND RECORDS

Documentation procedures should be conducted in accordance with EPA's record keeping requirements. Work plans and final reports will be generated and submitted to BVCP for review and approval.

Field QA/QC documentation for site characterization reports and/or remedial action/risk management reports must consider the following details:

- Calibration and maintenance records for field instrumentation,

- Documentation of sample collection procedures,
- Reporting of any variances made in the field to sampling plans, SOPs or other applicable guidance documents,
- Reporting of all field analysis results,
- Documentation of sample custody (provide copies of chain-of-custody documents),
- Documentation of sample preservation, handling and transportation procedures,
- Documentation of field decontamination procedures (and if applicable, collection and analysis of equipment rinsate blanks),
- Collection and analysis of all required duplicate, replicate, background and trip blank samples, and
- Documentation of disposal of investigation-derived wastes.

Laboratory QA/QC documentation for site characterization reports and/or remedial action/risk management reports must consider the following details:

- If the published analytical method used specifies QA/QC requirements within the method, those requirements must be met and the QA/QC data reported with the sample results;
- At a minimum, QA/QC samples must consist of the following items (where applicable): method/instrument blank, extraction/digestion blank, initial calibration information, initial calibration verification, continuing calibration verification, laboratory fortified blanks/laboratory control samples, duplicate, and matrix spikes/matrix spike duplicates;
- Documentation of appropriate instrument performance data such as internal standard and surrogate recovery.

B: DATA GENERATION AND ACQUISITION

B.1 SAMPLING PROCESS DESIGN

This QAPP is generic, covering many different projects and a large number of analytes in various complex sample matrices. The sampling design will vary depending on the goal of the sampling activity, such as site characterization or confirmatory sampling. Therefore, the sampling process design will be described in detail in the site-specific work plan and/or SSQA. Some considerations when developing a plan for a sampling design, particularly a judgmental sampling design, include potential contaminant(s) and locations based on past property uses, soil properties that affect contaminant migration, physical and chemical nature of potential contaminant(s), the manner in which contaminant(s) may have been released, and timing, duration and amount of potential release(s).

All QC samples will be collected in accordance with EPA guidance and described in the site-specific work plan. All QC samples will be documented in the sampling report. See Section B.5 for more information on QC samples.

B.2 SAMPLING METHODS

The field investigations and sample collection activities under the project will adhere to applicable SOPs and available EPA guidance and will be described in the site-specific work plan and/or SSQA. The site-specific work plan will indicate the location, type, number and media of the samples.

Manufacturer's specifications and operational instructions, other agency SOPs, other methods, instructions, including professional or scientific technical standards, may also be used for specific field analytical equipment, geophysical equipment, surveying instruments, etc. with no existing SOPs or EPA guidance upon approval of the BVCP Project Manager. The site-specific work plan will specify sampling methodologies and procedures used.

B.3 SAMPLE HANDLING AND CUSTODY

Sample handling and custody will be accomplished according to SOPs and using standard forms developed by contractor's laboratories. Sample container selection will be according to appropriate method guidance and/or SOPs. The site-specific work plan will specify sample handling procedures, sample containers, preservation, holding times, chain-of-custody and field documentation, handling of samples in the field, and transport of samples to the laboratory. All analyses will be conducted within the EPA-specified maximum sample holding time limits. Any data obtained from analyses conducted on samples after the specified holding time limit will be qualified by the laboratory in sample result documentation and discussed in the sampling report.

B.4 ANALYTICAL METHODS

Field analytical measurements will be according to SOPs and manufacturer's operational instructions, such as immunoassay kit instructions, photoionization detector (PID) instructions, XRF manual, etc. Calibration and other QA/QC actions will be accomplished according to SOPs, manufacturer's minimum recommendations/ requirements and other appropriate scientific or technical standards. Appropriate EPA guidance, SOPs, best professional judgement and accepted industry and scientific practices will be used when correlating field analytical data to definitive data.

Laboratory measurements will be performed by the selected laboratory according to the method requested, generally according to EPA Solid Waste Methods SW-846 specified container, preparation and analytical methods. The QC procedures specified in these methods must be followed. The detection limits of the selected analytical methods generally will be able to achieve the concentrations of interest needed. Analytical parameters will vary by project; therefore, the analytical methods used for the parameters of concern should be specified in the site-specific work plan and/or SSQA.

All QC documentation must be provided with each analytical deliverable package. The contractor will be responsible for ensuring all analytical data provided by the contractor's laboratory for the project meets the contract requirements and the requirements of this QAPP.

B.5 QUALITY CONTROL

QC samples will be required to verify the validity of analytical results and to assess whether the samples were contaminated from sources not directly attributable to releases at the site (such as improper decontamination, cross-contamination, laboratory contamination, etc.). Field QC samples may include trip blanks, field blanks, equipment blanks/rinsate samples, replicates/field duplicates as appropriate. The field QC samples proposed for collection will be included in the site-specific work plan. Trip blanks indicate if any activities after obtaining the trip blank may have contaminated samples during transport. Field blanks are samples obtained in the field to determine if contaminants were introduced by sample containers, preservatives, sampling procedures, etc. Replicate samples may be obtained to assess the reproducibility of the sampling procedures, data obtained and the analytical methods. Rinsate samples are obtained to verify adequate decontamination of sampling equipment. For all projects involving the collection of aqueous samples, a trip blank will be included at a frequency of one per separate sampling event (mobilization). An equipment rinsate blank will be collected for projects where the sampling equipment is decontaminated in the field for reuse. The equipment rinsate blank will be collected at a frequency of one per separate sampling event (mobilization) for each different combination of sampling equipment, decontamination method, and analytical parameter.

Contaminants should not be detected above the laboratory reporting level in trip blanks, field blanks, and equipment rinse blanks. Any data that do not meet these accuracy criteria will be qualified on sample results. The BVCP Project Manager and contractor personnel will evaluate all qualified data on a project-specific basis, and determine how/whether to use the data.

Total precision of the entire sampling and analytical process will be assessed using analyses of blind field duplicate and replicate split samples. Aqueous precision QC samples will be collected as duplicates, while non-aqueous precision QC samples will be sampled as replicate splits.

At least one set of precision QC samples for each media (groundwater, surface water, soil/sediment, air) should be collected per site. All QC samples will be documented in the sampling report, and should be collected at a frequency in accordance with applicable SOPs.

Laboratory QC samples include duplicates, spikes, laboratory blanks, and performance evaluation samples, and are performed by the fixed laboratory according to the approved laboratory QA/QC plans.

B.6 INSTRUMENT/EQUIPMENT TESTING, INSPECTION AND MAINTENANCE

Field analytical instruments used during this project will be maintained and calibrated according to instructions provided by the instrument manufacturer, and other appropriate scientific and technical guidance and standards pertinent to the specific instrument in use. The contractor will be responsible for performing operational checks on all field

equipment prior to use in the field. An operational problem with any field instrumentation will be noted by the contractor in the field notebook. Daily or regular calibration of field instrumentation will be according to applicable SOPs and manufacturer's instructions and indicated or referenced in the site-specific work plan.

Fixed laboratory equipment for contract laboratories used for quantitative sample analysis will be tested, inspected, calibrated and maintained according to the specific analytical equipment requirements as stated in the SOPs of the laboratory, in accordance with manufacturer-specified procedures or method-specified procedures, as appropriate.

B.7 INSTRUMENT/EQUIPMENT CALLIBRATION AND FREQUENCY

Maintenance and calibration procedures will be conducted in accordance with manufacturers' instrument manuals, method-specified procedures and the laboratory SOPs, as appropriate.

B.8 INSPECTION/ACCEPTANCE OF SUPPLIES AND CONSUMABLES

Inspection and acceptance of supplies and consumables will be conducted according to applicable SOPs. Any supplies and consumables used in the sample collection process or instrument calibration such as sample bottles, bailers, dedicated tubing, deionized water, calibration gases, etc., will be inspected upon receipt and prior to use.

B.9 NON-DIRECT MEASUREMENTS

Several types of data and information may be obtained from non-measurement sources for use in projects conducted under this QAPP. The primary types of non-measurement data are Phase I Environmental Site Assessments, site reconnaissance, interviews of site owners or operators, published reference books and resources, databases, and internet resources. These data may be used to design sampling plans and may be used with the directly measured data collected during each project to evaluate the potential need for further site characterization, remediation and/or suitability for development. Non-direct measurement data will be documented and referenced in any document for which they are used.

B.10 DATA MANAGEMENT

Data management, including chain-of-custody review and correction, data review, reduction and transfer to data management systems, quality control charts, quality control procedures, and sample receipt, storage and disposal, will be in accordance with applicable SOPs and accepted industry practices.

Documentation will be in accordance with applicable SOPs and accepted industry practices, and will include the sampling reports, copy of the chain-of-custody, and field QA controls with the analytical results. All sample documents will be legibly written in ink. Any corrections or revisions to sample documentation shall be made by lining through the original entry and initialing and dating any changes. Data reduction will occur in accordance with contractor analytical SOPs for each parameter. If difficulties are encountered during sample collection or sample analyses, a brief description of the

problem will be provided in the sampling report prepared by contractor. Data reporting will be in accordance with applicable SOPs and will include, at a minimum:

- Sample documentation (location, date and time of collection and analysis, etc.)
- Chain-of-custody forms
- Initial and continuing calibration
- Determination and documentation of detection limits
- Analyte(s) identification
- Analyte(s) quantitation
- Quality Control sample results
- Duplicate results

Adequate precautions will be taken during the reduction, manipulation, and storage of data in order to prevent the introduction of errors or the loss or misinterpretation of data.

C: ASSESSMENT AND OVERSIGHT

C.1 ASSESSMENTS AND RESPONSE ACTIONS

This section describes the internal and external checks necessary to ensure that all elements of the QAPP are implemented correctly as prescribed, that the quality of the data generated by implementation of the QAPP is adequate, and that any necessary corrective actions are implemented in a timely manner.

C.1.1 Laboratory Performance Assessment

Laboratories will comply with all of the EPA and the National Environmental Laboratory Accreditation Conference (NELAC) requirements for laboratory QA programs. Data resulting from the participation in this program shall be reviewed by the laboratory Quality Assurance Manager and any problems shall be addressed.

C.1.2 Field Performance Assessment

The auditor in charge of field QA will conduct audits of field activities according to contractor QA field auditing procedures. The process of choosing when field audits are conducted is not based on a particular project or site-sampling event, but rather on assuring that each person involved in sample collection is audited at least once per year. The contractor's field QA auditor will have the responsibility for initiating and implementing response actions associated with findings identified during the field audit. The field personnel shall properly address any response actions needed.

C.1.3 Overall QAPP Assessment

EPA conducts periodic evaluations of the state's environmental programs. These evaluations normally include some type of review of the program's quality management system, and may include examination of QAPPs.

C.1.4 Data Validation

All field and laboratory data will be subject to validation to review for accuracy, precision, completeness, representativeness and comparability. Data validation is discussed in more detail in Section D. The acceptance criteria for measurement data are discussed in Section A.6.

C.2 REPORTS TO MANAGEMENT

Data from the contractor's laboratory will be submitted to the BVCP Project Manager as an appendix to the final report using the laboratory analytical report sheets. The report sheets will include documentation of the sampling location, sample description, date of collection, collector, analysis performed and results, date of analysis, and analytical method used. A copy of the chain-of-custody and the lab results should also be attached to the final report. In addition, an explanation of any deficiencies in data quality should be provided with the sampling report.

Field performance assessment audits will be documented by the contractor's field QA auditor in a written report that will be kept on file at the contractor's office. Results from the laboratory's audit studies will be kept on file at contractor's office.

Comments and recommendations from the EPA Region VII periodic evaluations of state environmental programs are provided to the DEQ QA manager and used by DEQ management and staff to take any corrective actions which may be needed.

D: DATA VALIDATION AND USABILITY

D.1 DATA REVIEW, VERIFICATION AND VALIDATION

To ensure that measurement data generated when performing environmental sampling activities are of an appropriate quality, all data will be validated. Data validation is a systematic procedure for reviewing a body of data against a set of established criteria to provide a specified level of assurance of its validity prior to its intended use. The techniques used must be applied to the body of the data in a systematic and uniform manner. The process of data validation must be close to the origin of the data, independent of the data production, and objective in its approach. All data, as applicable, will be validated in accordance with EPA guidance, per Data Quality Objectives Process. Any deviations will be documented and provided with the analytical data report.

D.2 VERIFICATION AND VALIDATION METHODS

D.2.1 Documentation, Data Reduction and Reporting

Documentation will include the sampling reports, copy of the chain-of-custody, and field QA controls with the analytical results. Data reduction will occur in accordance with the laboratory's analytical SOPs for each parameter. If difficulties are encountered during sample analyses, a brief description of the problem will be provided.

Data derived from sampling events undertaken for projects under the oversight of the BVCP will be reported to the BVCP Project Manager as discussed in Section C.2. Reports to Management.

D.2.2 Data Validation

Data validation will occur as described in the analytical SOPs for each parameter and the laboratory SOPs for data review. Data validation is accomplished using control charts and data review checklists. Discrepancies are noted in the analytical file and appropriate data flags are used. If data is determined to be outside of control limits, the data is flagged on the report of analysis.

The laboratory personnel will look at matrix spikes/matrix spike duplicates, lab blanks, and lab duplicates to ensure they are acceptable. The sample collector will compare the sample descriptions with the field sheets for consistency and ensure that any anomalies in the data are documented. The contractor will perform a final review and approval to ensure that the data meets the quality objectives of this QAPP and, if applicable, the SSQA. The contractor's review and approval is a check on the reviews conducted by the laboratory to ensure consistency of all field and analytical data that is generated by the contractor.

D.3 RECONCILIATION WITH USER REQUIREMENTS

Once the final report is submitted, the BVCP Project Manager will review the field duplicates to determine if they appear to indicate a problem with meeting quality objectives. If problems are indicated, the BVCP Project Manager will contact the contractor to discuss and attempt to reconcile the issue. Completeness will also be evaluated to determine if the completeness goal for this project has been met. If data quality indicators do not meet the project's requirements as outlined in this QAPP and applicable SSQA, the data may be discarded and re-sampling may occur. The BVCP Project Manager will determine the cause of the failure (if possible) and make the decision to discard the data and re-sample. If the failure is tied to the analyses, calibration and maintenance techniques will be reassessed as identified by the appropriate lab personnel. If the failure is associated with the sample collection and re-sampling is needed, the sampling methods and procedures will be reassessed as identified by the field audit process.

Corrective action will be undertaken by all parties to address specific problems as they arise. Corrective actions required will be identified through the use of control charts for chemical analyses, precision and accuracy data, through performance auditing, and through systems audits.

REFERENCES

- EPA Guidance for Representative Sampling, OSWER Directives 9360.4-10 and 9360.4-16, December 1995.
- EPA Guidance for Quality Assurance Project Plans, EPA/600/R-98/018, February 1998.
- EPA Guidance for Data Quality Assessment, EPA/600/R-96/084, January 1998.
- EPA Guidance for Data Quality Objectives Process, EPA/600/R-96/055, September 1994.

APPENDIX A: LISTING OF ACRONYMS & TERMS

BVCP	Brownfields/Voluntary Cleanup Program
CERCLA	Comprehensive Environmental Response, Compensation and Liability Act
DQO	Data Quality Objectives
EPA	United States Environmental Protection Agency
HAZWOPER	Hazardous Waste Operations and Emergency Response
MCL	Maximum Contaminant Level
MRBCA	Missouri Risk-based Corrective Action Process
NELAC	National Environmental Laboratory Accreditation Conference
QA	Quality Assurance
QAPP	Quality Assurance Project Plan
QC	Quality Control
SOP	Standard Operating Procedure
SSQA	Site-Specific Quality Assurance Project Plan Addendum
SVOC	Semi-Volatile Organic Compound
VOA	Volatile Organic Analysis
VOC	Volatile Organic Compound

Duplicate or co-located sample is a sample obtained from the same location, at the same time, and of the same material as the original sample. Duplicate water samples are used primarily to assess precision associated with sampling methodology, and to a lesser extent sample heterogeneity and analytical procedures. Duplicate soil samples are used primarily to determine the variability or heterogeneity of the sampled media. Due to the heterogeneity of soils, caution must be used if attempting to assess precision associated with sampling methodology or analytical procedures.

Hazardous Substance means a substance defined as hazardous pursuant to federal rule 40 CFR 302.4, which includes asbestos and Polychlorinated Biphenyls (PCBs); any substance designated pursuant to Section 311(b)(2)(A) of the federal Water Pollution Control Act; any toxic pollutant listed under Section 307(a) of the federal Water Pollution Control Act; any hazardous air pollutant listed under Section 112 of the Clean Air Act; any imminently hazardous chemical substance or mixture with respect to which the Administration of EPA has taken action pursuant to Section 7 of the Toxic Substances Control Act; any hazardous waste; any hazardous material designated by the Secretary of the U.S. Department of Transportation under the Hazardous Materials Transportation Act; any radioactive materials; or any petroleum product.

Hazardous waste means waste defined to be hazardous pursuant to the Missouri Hazardous Waste Management Law Section 260.350 to Section 260.430 or pursuant to federal rule 40 CFR 261.

Replicate split sample is obtained by dividing or splitting one sample that has been mixed or homogenized into two samples for separate analysis. A replicate split is collected primarily to assess precision associated with analytical procedures and to a lesser extent sample handling procedures. Replicate split samples of soils or other non-aqueous materials are not recommended if volatile organics analyses are requested due to

the potential loss of the volatiles during the mixing process. Duplicate samples for volatile organics analyses are sometimes collected prior to mixing, however, there may be a greater potential for inconsistency due to the heterogeneous nature of soils or other non-aqueous media.

APPENDIX B: ANALYTICAL REQUIREMENTS

The detection limits, as specified in 40 CFR 136 Appendix A and the EPA SW-846 Methods, are sufficient for most project under the oversight of the BVCP. The accuracy and precision of each analytical method are determined by using spikes and spike duplicate analyses, as specified in the EPA SW-846 methods.

APPENDIX D

Site-Specific Quality Assurance Addendum to MDNR QAPP

MISSOURI DEPARTMENT OF NATURAL RESOURCES
AIR AND LAND PROTECTION DIVISION
HAZARDOUS WASTE PROGRAM
BROWNFIELDS/VOLUNTARY CLEANUP PROGRAM (BVCP)
SITE-SPECIFIC QUALITY ASSURANCE PROJECT PLAN ADDENDUM (SSQA)

I. SITE NAME AND LOCATION:

SITE NAME: JORDAN VALLEY WEST MEADOWS SITE #1

ADDRESS OR OTHER LOCATION IDENTIFIER: 725 W. Olive Street

CITY: Springfield	COUNTY: Greene	STATE: Missouri	ZIP:

II. PROJECT MANAGEMENT INFORMATION:

CONTRACTOR: Terracon Consultants, Inc.	CONTRACTOR E-MAIL: ejgorman@terracon.com
ADDRESS: 13910 W 96th Terrace, Lenexa, Kansas 66215	
PHONE: 913-492-7777	FAX: 913-492-7443

DISTRIBUTION LIST (Check as appropriate):

X BVCP Project Manager:
☐ Consultant/Contractor Director:
X Consultant/Contractor Project Manager:
X Consultant/Contractor Project Field Superintendent:
☐ Consultant/Contractor Laboratory Personnel:
☐ Technicians (Specify all):
X Other (Specify): EPA, Region 7, Alma Moreno Lahm

PROJECT TYPE (Check as appropriate):

☐ Site Investigation/Characterization ✠ Remedial Action ☐ Risk Management ☐ Other (specify):

PROJECT DESCRIPTION: (Note: This SSQA supplements the Generic QAPP for Brownfields/Voluntary Cleanup Program Sites, and includes documentation only for the specific site as indicated above.)

The Remedial Action Plan outlines an approach to remove the impacted surface soils and fill materials on the site through general excavation and off-site disposal according to applicable regulations. Intrusive verification sampling will be completed using quantitative field x-ray fluorescence (XRF) and laboratory analysis.

DATA QUALITY OBJECTIVES AND CRITERIA:

Detection Limits:	✠ According to Generic Site Assessment QAPP	☐ Identified in attached table
Accuracy:	✠ According to Generic Site Assessment QAPP	☐ Identified in attached table
Representativeness:	✠ According to Generic Site Assessment QAPP	☐ Identified in attached table
Comparability:	✠ According to Generic Site Assessment QAPP	☐ Identified in attached table
Completeness:	✠ According to Generic Site Assessment QAPP	☐ Identified in attached table

SPECIAL TRAINING/CERTIFICATION REQUIREMENTS:

✠ OSHA 40-hour (HAZWOPER) ☐ Geoprobe Operator ☐ Drill Rig Operator ☐ Mobile GC Field Analyst
☐ In-Field XRF Operator ☐ Other (specify):

DOCUMENTATION AND RECORDS (Check appropriate boxes):

☐ Field Analytical Sheets ☒ Log Book ☒ Photos
☒ Site Maps/Figures ☒ Chain-of-Custody ☐ Property Ownership Records
☐ Environmental Records Report ☐ Utility Clearance Forms ☒ Health and Safety Plan

Other Documentation (Specify):

SAMPLING PROCESS DESIGN:

A. General Sampling Approach (Check appropriate boxes):

☒ Judgmental Sampling ☐ Transect Sampling ☐ Search Sampling ☒ Systematic Grid
☐ Random Sampling ☐ Stratified Random Sampling ☐ Systematic Random Sampling

B. Screening/Definitive Sampling (Check appropriate boxes):

☐ Screening without Definitive Confirmation
☒ Screening With Definitive Confirmation
NOTE: Minimum Confirmation Rate of 10 % for All Field Analytical Screening Samples Collected
☐ Definitive Sampling

SAMPLING METHODS (Specify all to be utilized):

Matrix: Methods: SOPs/Guidance: Sampling Equipment Proposed:

See Remedial Action Plan Sections 6.0, Remedial Action Tasks.

SAMPLE HANDLING AND CUSTODY (Check appropriate box):

☐ In accordance with Generic QAPP and SOPs ☐ Other (specify):

See Remedial Action Plan Section 6.4, Sample Collection and Handling

ANALYTICAL METHODS (Check appropriate box):

☐ Identified in Attached Table ☐ Identified Below (Describe):

See Remedial Action Plan Section 7.1 and Tables 4 and 5

QUALITY CONTROL (Check appropriate box):

☐ Not Applicable ☐ In accordance with Generic QAPP ☐ Specific requirements (state):

Describe Field QC Samples to be collected:

See Remedial Action Plan Section 8.0 QUALITY CONTROL PROCEDURES.

B/VCP SITE-SPECIFIC QAPP ADDENDUM FORM

INSTRUMENT/EQUIPMENT TESTING, INSPECTION, CALIBRATION/FREQUENCY AND MAINTENANCE (Check appropriate box):

☐ **Not Applicable** ☐ **In accordance with Generic QAPP** ☐ **Specific requirements (state):**

Describe instrument/equipment, etc. proposed for use in this project subject to the above requirements:
Please see the following for specific requirements:
APPENDIX E – Terracon Standard Operating Procedures (SOPs)
APPENDIX F – Environmental Science Corporation Laboratory Quality Assurance Program Manual on Compact Disk
APPENDIX G – Site-Specific Health and Safety Plan

INSPECTION/ACCEPTANCE OF SUPPLIES AND CONSUMABLES (Check appropriate box):

☐ **Not Applicable** ✠ **In accordance with Generic QAPP** ☐ **Specific requirements (state):**

NON-DIRECT MEASUREMENTS (Check appropriate box):

☐ **Not Applicable** ✠ **In accordance with Generic QAPP** ☐ **Specific requirements (state):**

DATA MANAGEMENT (Check appropriate box):

✠ **In accordance with Generic QAPP** ☐ **Specific requirements (state):**

ASSESSMENT AND RESPONSE ACTIONS (Check appropriate box):

✠ **In accordance with Generic QAPP** ☐ **Specific requirements (state):**

REPORTS TO MANAGEMENT (Check appropriate box):

☐ **In accordance with Generic QAPP** ☐ **Specific requirements (state):**

See Technical Work Plan, Section 2.4.3

DATA VALIDATION AND USABILITY (Check appropriate box):

✠ **Data review and verification will be performed by the contractor or delegate in accordance with Generic QAPP, with data validation conducted according to USEPA guidance and Generic QAPP**

☐ **Data review, validation and verification will be performed as follows, with data validation conducted according to alternate methods (describe):**

Field analysis utilized? Yes ____ No X (If yes, memorandum, field analytical sheets, etc. from field analyst should be reviewed by the contractor after completion of field analysis).

RECONCILIATION WITH USER REQUIREMENTS (Check appropriate box):

✠ **In accordance with Generic QAPP** ☐ **Specific requirements (state):**

B/VCP SITE-SPECIFIC QAPP ADDENDUM FORM

APPROVALS:

BVCP Project Manager Name	**Signature**	**Date**
Contractor Director Name	**Signature**	**Date**
Contractor Project Manager Name	**Signature**	**Date**
Contractor Field Superintendent Name	**Signature**	**Date**

APPENDIX E

Terracon Standard Operating Procedures (SOPs)

E.410
SUBSURFACE SAMPLING – GENERAL PUSH-PROBE TECHNOLOGY

Last Revision or Review: April 2002

1. OBJECTIVE

Geoprobe© equipment is a proprietary system capable of performing both sampling and onsite analysis functions. The proprietary name Geoprobe© has become synonymous with pushprobe technology, where the samplers or monitoring technology are advanced to depth by hydraulic push. The push may be assisted by inducing a vibration to the sampler.

Generally, sampling is accomplished using hydraulically pushed probes and analysis is accomplished using a gas chromatograph (GC). This equipment was originally developed to screen for the subsurface presence of volatile organic compounds (VOCs) in unsaturated zone soil gas. It may also be used to obtain soil and ground water samples and to screen such samples for VOCs or semivolatile organic compounds (SVOCs). However, the analytes of primary interest in Geoprobe work are generally VOCs.

Geoprobe equipment offers a relatively high degree of mobility for sampling and the ability to produce screening level analytical results while still mobilized to a site. The cost-effectiveness of this approach is reduced when soil or ground water samples are of interest, the analytes involved are SVOCs, or a higher degree of analytical quality is necessary.

The purpose of this document is to provide Terracon Geoprobe operators with a standard field procedure for general application. It may be supplemented by the generation of written site-specific sampling and analysis plans (SAPs) prepared prior to field work. Project Managers are generally responsible for providing Geoprobe operators with a SAP sufficiently in advance of proposed site work to allow for proper mobilization (including procurement of any necessary sampling equipment, sample containers, analytical standards, reagents, personal protective equipment, or other necessary equipment) and are required to consult with Geoprobe operators in the development of such SAPs.

2. SAFETY AND HEALTH

All Terracon field work is carried out under the provisions of a safety and health plan. Most Geoprobe work is covered by generic safety and health plans pertinent to intrusive work where petroleum hydrocarbons are anticipated or where there is a potential to encounter low concentrations of either petroleum hydrocarbons or chlorinated compounds. For any project involving greater potential hazard (e.g., work inside spaces with restricted ventilation and the potential to encounter high concentrations of volatile compounds, work involving the potential to encounter high concentrations of chlorinated compounds, or solvent extraction prior to analysis),

the Project Manager will ensure that a site-specific safety and health plan is obtained from the Corporate Safety and Health Manager prior to mobilization.

3. EQUIPMENT

Geoprobe equipment may vary from unit to unit. But should carry the equivalent of the following equipment mounted in mobile one ton van:

1. Geoprobe components -

a. GW-40 hydraulically powered probe.
b. 1 inch nominal diameter 3 feet length probe rods.
c. Soil piston samplers and acetate liners.

2. GC components[1] -

a. Shimadzu GC-14A laboratory quality GC.
b. Shimadzu electron capture detector (ECD).
c. Shimadzu flame ionization detector (FID).
d. Photoionization detector (PID).
e. 30 m x 0.53 mm ID Supelco 3 mm Vocol capillary column.
f. Shimadzu gas flow controller.
g. Compressed air (service to FID).
h. Compressed hydrogen (service to FID).
i. Ultrapure compressed nitrogen or helium (carrier gas).
j. Regulators for compressed gas bottles.
k. Various size glass syringes (1 uL to 5 mL).
l. Appropriate analytical standards.
m. 40 mL nominal volatile organic analysis (VOA) vials.

3. Data system components -

a. APEX CSI dual channel A to D converter.
b. Sager NP 700 486-66 laptop computer.
c. APEX data system program (Version 2.1).

4. Miscellaneous equipment -

a. Scale.
b. Oven.
c. Fire extinguisher.

---

[1] *Current equipment is listed. Equipment may change as appropriate for the analytes of concern and to reflect new technological developments. For example, the PID is currently out of service and is expected to be replaced in the future. Therefore, specific information regarding it is not listed. The standard column currently in use is listed. However, other columns may be more appropriate for the analyte(s) of concern in a specific project.*

d. Various tools.
e. Clean distilled and/or deionized water (hereinafter referred to as distilled) water.

4. METHODS

A. Sample Collection and Holding

The Geoprobe van, the working end of the hydraulic system (i.e., those portions of the system in contact with probe rods), all used probe rods, and all used sample contacting equipment will be cleaned prior to coming onsite for the first time in a project. Hydraulic lines will also be checked and tightened, if necessary, to ensure that no leaks are occurring. Clean probe rods will be used for each probe and used probe rods will be kept segregated from clean probe rods from the time they have been used until they have been cleaned. The working end of the hydraulic system will also be checked between probes and cleaned as necessary to reduce potential cross-contamination (see Section 4.D below regarding cleaning procedures).

1. Soil Gas Samples (Onsite Analysis)

a. Soil gas samples provide semiquantitative information concerning concentrations of VOCs in soil gas at the time of sampling. These may be influenced by the proximity of sources of VOC contamination (e.g., vertical contamination in the unsaturated zone soil profile or contaminated ground water) as well as a variety of other factors (e.g., soil and VOC characteristics and ambient temperature).

b. Soil gas samples will be taken at a depth of at least 6 feet below ground level (BGL). When attempting to characterize contaminated ground water plumes, soil gas samples will be taken within 3 feet of ground water.

c. Soil gas probes will be placed into the ground in a manner that will maintain a seal between the probe and the surrounding soil.

d. The suitability of each sampling location will be determined by testing the air permeability of the soil from which the sample is to be taken. An amount of air equal to five to 10 times the internal volume of the probe will be extracted prior to sampling. If this volume cannot be drawn within 10 minutes, soil gas cannot be used to test for VOC contamination at that location.

e. The sample will be collected for analysis without opening the system to outside air.

f. The sampling stream will be completely free of elastomers and each component of the sampling stream shall be new and clean or have been cleaned prior to each use. The cleanliness of the sampling stream shall be verified by running analytical blanks as specified in this document.

g. Soil gas samples will be analyzed immediately after the sample has been obtained.

2. Soil Samples (On/Offsite Analysis)

a. Currently accepted standard procedures for sample collection, sample preparation, and analysis of VOC contaminated soil samples necessarily involve substantial losses. Therefore, results for such samples should only be considered semiquantitative. Additionally, quantitative comparison of results should take into account whether they are based on dry or wet sample weight. Generally, commercial analytical laboratories report on a wet weight basis. However, results may be reported on a dry weight basis under certain circumstances.

b. Soil samples will be obtained using any standard Geoprobe sampler. Typically these consist of various size piston samplers. Preference is given to the use of large bore samplers with removable acetate liners. These are capable of recovering cores 24 inches long and 1-1/8 inches in diameter. Standard thin-walled samplers (Shelby tubes) may also be utilized.

c. A variety of containers are appropriate for the collection and storage of soil samples. These include the acetate liners noted above. When such liners are used, the ends must be sealed during storage prior to analysis and aliquots to be analyzed should be obtained from as near the center of the sample as possible. Soil samples to be sent offsite for analysis should be collected in clean, 4 ounce glass containers with Teflon-lined lids. Soil should be placed in these containers rapidly, with as little matrix disturbance as possible, and in a manner that minimizes headspace. The container should be tightly sealed immediately after the sample is placed in it. All soil samples should be preserved by cooling to 4 ^{o}C if they are not analyzed immediately after collection. Geoprobe analysis of soil samples for VOCs must be completed within 24 hours of sample collection.

d. Soil samplers will be cleaned prior to initial use at a site. They will also be cleaned prior to each subsequent use. The cleanliness of soil samplers shall be verified by running analytical blanks as specified in this document.

3. Ground Water Samples (On/Offsite Analysis)

a. Ground water samples obtained using Geoprobe equipment can be expected to contain substantial concentrations of sediments. Therefore, they should be considered equivalent in character to borehole water samples.

b. Ground water samples will normally be collected by vacuum extraction using the same probe rods and tubing utilized for soil gas sample collection. The Geoprobe may also be used to install small diameter slotted well points or push screen point samplers. Additionally, ground water samples may be obtained through probe rods or from slotted well points using stainless steel mini-bailers.

c. Ground water samples will be placed in clean, glass 40 mL VOA vials with open caps and Teflon septums. The sample shall be placed into these vials rapidly, with as little turbulence as possible, and in a manner that eliminates headspace. The container should be

tightly sealed immediately after the sample is placed in it. All ground water samples should be preserved by cooling to 4 ^{o}C if they are not analyzed immediately after collection. Geoprobe analysis of ground water samples for VOCs must be completed within 24 hours of sample collection.

d. The sampling stream will be completely free of elastomers and each component of the sampling stream shall be new and clean or have been cleaned in accordance with the procedures specified in this document prior to each use. When reusable equipment is used (e.g., stainless steel mini-bailers), it will be cleaned prior to initial use and each subsequent use. The cleanliness of the sampling stream shall be verified by running analytical blanks as specified in this document.

Probe holes will generally be abandoned by backfilling with bentonite pellets immediately after rods and samplers have been withdrawn. In the event more restrictive project, local, or state requirements exist, they will be identified prior to field work and complied with.

B. Sample Preparation and Analysis (Onsite Analysis)

Manufacturer instructions will be complied with in the operation of the GC and ancillary equipment for the analysis of environmental samples. Information from the scientific literature will also be relied on for guidance. Selection of columns, GC operating parameters, and detectors will be consistent with and appropriate for the types of analytes of concern.

1. Soil Gas Samples

Soil gas samples are obtained with a glass syringe and run by direct injection into the GC. No other sample preparation is required. The volume of the injection can be varied to keep the response within the range of the calibration curve and bracketed by standards. Soil gas samples must be run at the time they are obtained. They may not be held for subsequent analysis.

2. Soil and Ground Water Samples

a. VOCs

1) VOCs must be extracted from the soil or ground water matrix for analysis by GC. This may be accomplished by purge and trap or headspace procedures. The normal Geoprobe procedure will be heated headspace. Research indicates that results by either approach can be expected to correlate well in the case of water samples that do not contain substantial concentrations of sediments. Data pertaining to the effect of sediments is lacking; however, purge and trap would be expected to be a more effective extraction procedure than headspace in the case of VOCs that are more likely to be adsorbed (i.e., having higher log octanol/water partition coefficients). Differences in the efficiency of extraction procedures for

specific VOCs should be considered when comparing Geo-probe and analytical laboratory results for split samples.

2) Soil Heated Headspace Analysis

a) Weigh a clean, dry, 40 mL VOA vial (with the top off). Record this weight to the nearest 0.1 g. The approximate mean weight of such vials is 24.1 g.

b) Place approximately 5 g of the soil sample in the vial and obtain their combined weight. Record this weight to the nearest 0.1 g and proceed to the next step (the combined weight minus the empty vial's weight is the weight of the sample). In the case of heavily contaminated samples, the mass of sample used can be reduced to keep the response within the range of the calibration curve and bracketed by standards.

c) Using a graduated cylinder, add 20 mL of clean, distilled water into the vial with the sample and cover it snugly by screwing on the vial's open top cap and Teflon seal.

d) Shake the sample to attempt to break the soil up.

e) Heat the sample in an oven at 60 ^{o}C for 15 minutes to facilitate volatilization of VOCs from the sample into the vial headspace.

f) Using a clean glass syringe, obtain a headspace gas sample through the Teflon seal for direct injection into the GC. The volume of the injection can be varied to keep the response within the range of the calibration curve and bracketed by standards.

3) Ground Water Heated Headspace Analysis

a) Using a clean graduated cylinder, place 20 mL[2] of the ground water sample into a clean 40 mL VOA vial and cover it snugly by screwing on the vial's open top cap and Teflon seal.

b) Heat the sample in an oven at 60 ^{o}C for 15 minutes to facilitate volatilization of VOCs from the sample into the vial headspace.

c) Using a clean glass syringe, obtain a headspace gas sample through the Teflon seal for direct injection into the GC. The volume of the injection can be varied to keep the response within the range of the calibration curve and bracketed by standards.

---

[2] *The intention is to fill the vial to a volume exactly the same as that used for standards and approximately half full. Since the actual volume of these vials is approximately 44 mL, this will make the volumetric concentration of headspace gas slightly less than that of the ground water sample, if all VOCs can be driven from the aqueous to the gaseous phase. However, aqueous phase samples and standards having the same contaminant concentrations should produce equal gas phase concentrations.*

b. Various chemical extraction methods are available which may be used for SVOCs. Selection of an appropriate method will be made on a case-by-case basis. Whenever such a method is used, quality assurance (QA) measures will be utilized to evaluate its effectiveness (e.g., submittal of duplicate samples for laboratory confirmation or analysis of soil media certified performance evaluation samples) and appropriate provisions will be incorporated within the project safety and health plan.

3. Temperature Programs

The temperature program utilized must be appropriate for the analyte(s) of concern. Standard programs are as follows:

a. Chlorinated Solvents

1) Injector 225 ^{o}C
2) Initial column[3] 35 ^{o}C for 2 minutes
3) Column ramp rate 10 ^{o}C/minute
4) Final column 100 ^{o}C for 2 minutes
5) ECD and PID 250 ^{o}C

b. Petroleum Hydrocarbons

1) Injector 225 ^{o}C
2) Initial column 60 ^{o}C for 2 minutes
3) Column ramp rate 10 ^{o}C/minute
4) Final column
   1) BTEX/Gas TPH 150 ^{o}C for 2 minutes
   2) Diesel TPH 200 ^{o}C
5) FID and PID 250 ^{o}C

4. Compressed Gas Flow Rates

The standard column nitrogen gas flow rate is 10 mL/minute. The standard FID gas flow rates are 20 mL/minute for air and 4 mL/minute for hydrogen.

C. Analytical Quality Control and Assurance

Quality control (QC) and assurance (QA) terms have been variously defined. In this procedure they are defined as follows: QC consists of those activities performed for the purpose of controlling analytical quality; and QA consists of those activities performed for the purpose of providing assurance that analytical quality is in fact being achieved. By these definitions, QC activities include training of personnel, utilization of standard procedures, maintaining clean conditions through the use of new or properly cleaned equipment and reagents, maintenance of equipment, calibration activities, and documentation. QA activities include analysis of blanks,

[3] *When ambient air temperature exceeds 75 ^{o}F the initial column temperature will be 45 ^{o}C.*

analysis of known concentrations or spikes (including surrogates), analysis of replicate samples, analysis of evaluation samples, and audits. QA activities provide evidence that the analytical process is under control and capable of producing suitably unbiased, accurate, and precise results.

1. Quality Control

A primary QC requirement is that GC operators be properly trained and knowledgeable. However, operator training will not be otherwise addressed in this document. The purpose of this procedure is to help ensure that standard methods are available and implemented. Equipment cleaning procedures are specified in Section 4.D of this document. In general, maintenance of all equipment will be performed as specified in manufacturer instructions. Documentation requirements are specified in Section 5 below. Minimum calibration requirements are as follows:

a. Standards for calibration will be prepared from pure standard materials or purchased as certified solutions. Standards will be prepared in methanol. Standards will be stored with minimal headspace, at 4 ^{o}C, and protected from light. All standards must be replaced after six months, or sooner if comparison with check standards or other QA measures indicate a problem.

b. Initial calibration. When new equipment has been placed in operation, an initial calibration curve will be generated. A minimum of three standard levels will be used for initial instrument calibration when either an FID or PID is in use. When an ECD is used, a minimum of five standard levels will be used.

c. Continuing calibration. The calibration curve will be verified each working day by the injection of one or more calibration standards prior to analysis of any samples. If the response for analytes is within the range of 80 to 120 percent of that predicted, sample analysis may continue with the same calibration curve. If recovery is outside of that range, a new calibration curve will be prepared for the analyte involved by running two additional standards. Calibration standards will be run at a frequency of at least one for every 10 samples. When an ECD is in use, this frequency will be increased to one for every five samples. When a new calibration curve is required, results for all samples which have been run since the last satisfactory continuing calibration will be appropriately qualified to indicate that circumstance.

d. The type of calibration standard will be appropriate to the type of sample being analyzed. Gas phase standards will be used when analyzing soil gas and aqueous phase standards will be used to produce headspace gas for injection when analyzing soil and ground water samples. The working range will generally be defined by initial calibration standards of the following concentrations -

1) Gas phase: 15, 30, and 60 ug/L for all detectors. These concentrations will be achieved by varying injection volumes from a single concentration standard.

2) Aqueous phase: 5, 25, and 100 ug/L for FID and PID and 1, 5, 10, 25, and 50 ug/L for ECD. These concentrations will be achieved by a combination of varying the mass of standard injected into distilled water and/or injection volumes.

e. The calibration curve will be linear and pass through the origin. Additionally, the calculated correlation coefficient for it shall be 0.95 or greater.

f. Other combinations of calibration standards may be used if information on site conditions indicates they would produce equivalent or better results.

Additional QC requirements are as follows:

a. Glass syringes may be used on one sample per day. After use, they must be cleaned prior to reuse. Cleaning is accomplished by washing as necessary, rinsing with hexane and methanol, and baking at a temperature of at least 60 ^{o}C for at least 15 minutes.

b. The GC sample injector port septum will be replaced regularly, depending on use, to prevent possible gas leakage.

c. When pulling gas or aqueous phase samples from probes, tubing will be connected to the vacuum pump via an adaptor which does not come into contact with the sample stream. The adaptor will be replaced periodically as necessary to ensure cleanliness and a good fit. At the end of each working day, adaptors which have been used will be cleaned with a detergent solution, rinsed with control water, and baked at a temperature of at least 60 ^{o}C for at least 15 minutes prior to being reused.

2. Quality Assurance

a. Method Blanks

Method blanks will be run for the purpose of evaluating process bias. The following method blanks will be performed:

1) A method blank will be run at the beginning and, generally, near the end of each day of operation. However, the second method blank will not be run if cleaning of sample contacting equipment has not been performed or if results for a site are predominantly low or below detection limits. The method blank will include final rinse water from cleaning of probe rods and/or sample contacting equipment and aliquots of any reagents used in sample preparation. Distilled or "control water" will be substituted for final rinse water if the latter is unavailable.

2) If analytes are detected in a method blank, the source of the contamination will be identified and measures instituted to eliminate it. Results for any project samples which have already been run since the last clean method blank will also be evaluated to determine the impact of this circumstance. If the analytes involved were detected in them, they will be rerun. Otherwise, they will not be rerun.

b. Known Concentrations or Spikes

Continuing calibration standards will be utilized as known concentrations for the purpose of evaluating process accuracy and bias. Surrogates and matrix spikes will not normally be analyzed. If surrogates or matrix spikes are analyzed, the acceptance range is 80 to 120 percent recovery. Results within this range indicate an acceptable level of accuracy. If results are outside of this range, data must be appropriately qualified to indicate that circumstance and corrective action taken to regain process control.

c. Replicates

For every 10 samples (or at least once per day), a replicate shall be run for the purpose of evaluating process precision. Replicates shall be carefully prepared to minimize sampling variation as a source of error. All available site information shall be utilized to ensure that detectable concentrations of analytes are present in replicates. If detectable concentrations of analytes are not present in samples, a replicate of at least one continuing calibration standard per day shall be run. Results of 25 percent or less relative percent difference (RPD) indicate an acceptable level of precision. The RPD for comparison with this criterion is calculated as the absolute difference between replicate results divided by their mean. If results exceed this RPD, data must be appropriately qualified to indicate that circumstance and corrective action taken to improve process control.

d. Performance Evaluation Samples

The Geoprobe QA Officer will ensure that at least one certified performance evaluation sample (water media) per quarter shall be run on a single blind basis. The nature of such samples shall take the general sample load into consideration. When target compounds are predominantly volatile petroleum hydrocarbons, most performance evaluation samples will consist of the compounds benzene, toluene, ethylbenzene, and xylenes (BTEX). At least once a year, a performance evaluation sample (water media) for selected volatile halocarbons will also be run.

e. QA Audits

QA audits will be performed by the Geoprobe QA Officer on an on-call and project-specific basis. The file on at least one completed Geoprobe project involving onsite GC analysis will be randomly selected for audit each quarter. At or about the same time, the Geoprobe QA Officer will visually inspect the Geoprobe van and all onboard associated equipment.

The Geoprobe QA Officer will prepare a report following each calendar year for submittal to all Southern Division Office Managers. It will include the following information for that period:

1. Performance evaluation sample results.
2. Routine project file audit results.
3. On-call project-specific audit results.
4. Geoprobe van visual inspection results.

D. Equipment Cleaning

Cleaning of field equipment will be performed in accordance with ASTM Standard D 5088-90. At a minimum, this means that probe rods and sample contacting equipment will be washed with a detergent solution and rinsed with "control water". Control water is defined as water having a known chemistry. Water from any public water supply operating in compliance with the Safe Drinking Water Act should meet this requirement. It will generally not be necessary to document the quality of control water unless there are unresolved method blank detections. Trihalomethanes are the volatile contaminants most likely to be encountered in control water. Where more rigorous cleaning procedures are necessary, they will be specified in the site-specific SAP.

5. DOCUMENTATION

A separate project file (alpha identifier) will be maintained for Geoprobe projects. This file will include the following minimum documents:

1. That portion of the project SAP covering Geoprobe work.
2. The site-specific safety and health plan for all work requiring one.
3. A short narrative project report to include -
   a. A summary of field work performed.
   b. A summary of field methods actually used if there were any substantial deviations from or changes to the SAP.
   c. Reasons for any changes to the SAP.
   d. A site diagram with sufficient detail or information to approximately identify the location of all probes performed and/or samples obtained.
   e. The identity of onsite Terracon project personnel.
   f. The identity of onsite client project personnel.
   g. The identity of onsite regulatory or other significant personnel.
4. Results for each sample run (including calibration and QA samples). Results include the chromatogram obtained and output values determined for analytes (i.e., retention time, area, peak height, and concentration). The source of calibration should be identified for all samples.
5. The initial calibration curve, results of continuing calibration standards, and any subsequent calibration curves.
6. Results for all QA samples including calculated recovery and relative percent difference (RPD) values.
7. Other relevant project data.

E.468
SAMPLE HANDLING - SOIL (LEVEL D)

1. OBJECTIVE

To obtain a representative soil or sediment sample for chemical analysis. This includes the documentation of sampling methods, and protocols used for sample collection, processing, handling and shipment.

2. EQUIPMENT

- Monitoring equipment (HNU, OVA, OVM, TGI, TIP, color metric detector tubes) as specified by Project Manager;
- Sampling Device (split barrel sampler, hand auger, hand trowel, shovel, posthole digger, tube sampler, etc.);
- Decontamination Equipment;
- Laboratory prepared sample containers;
- Forms including "Soil Sampling Information Sheet", chain-of-custody, etc;
- Indelible ink pen;
- Stainless steel bowl;
- Plastic sheet;
- Site map;
- Measuring wheel;
- Engineers tape marked in units of feet, tenths of a foot (0.1 ft.), and hundredths of a foot (0.01 ft.);
- Tool box;
- Surgical gloves; and
- Chem-wipes.

3. PROCEDURES.

a) Surficial soil/sampling

- Determine sample location (set grid, if necessary)
- Determine the proper sampling device based on soil type, depth, sample type, etc.
- Collect each sample at the specified depth consistently for each sample.

b) Direct Sampling

- Transfer sample directly from the sampling device to the sample container.
- If evaluating for organic vapors, transfer half of sample to glass mason jar or plastic bag (ziploc) for field testing. The sample should be split so as to obtain a sample for screening that is representative of the sample for testing. This can be accomplished by slicing the sample (if cohesive) lengthwise or by using other mechanical means. Care should be taken so as not to over-agitate the sample, especially if volatile organic compound testing is required.
- Document visual and physical characteristics

c) Composite sampling (non-volatile only)

- Decreases analytical cost but also decreases ability to detect low level contamination
- Transfer equal volume/weight of sample from each location/depth to a stainless steel mixing bowl
- Use a hand trowel or spoon to mix the soil sample
- If the sample size is very large, composite on a large sheet of clean plastic or stainless steel cookie sheet pan, or mix equal volumes from numerous composite samples.
- If soils are cohesive, break up clumps.
- Spread soil uniformly on plastic sheet or in bottom of stainless steel bowl or stainless steel tray and divide into quarters.
- Obtain equal quantity of soil from each sample for transfer to sample container (without mixing or break up).

d) Decontamination

- Decontamination procedures should be specified by the project manager.
- Decontamination procedures for UST sites includes an Alconox® detergent scrub followed by a clean water rinse.
- Decontamination fluids are to be replaced between sample locations (each boring) to reduce the potential for cross contamination.

e) Sample preservation - store in cooler with ice.

f) Sample documentation

- Complete the "Soil Sampling Information Sheet" and chain-of-custody form. Date to be recorded includes sampling location, methodology, depth, visual and physical characteristics, time and date.

4. ATTACHED SUPPORTING DOCUMENTATION

a) ASTM D4220 *Practice For Preserving and Transporting Soil Samples*

5. OTHER REFERENCES

a) Laboratory- or program-specific requirements for handling, preservation, and transport of samples for chemical analyses.

SOIL SAMPLING INFORMATION SHEET

PROJECT NAME _____ PROJECT NO. _____

PROJECT LOCATION _____

SAMPLE POINT _____ DATE _____ TIME _____
SAMPLE POINT DESCRIPTION _____
SAMPLE METHOD _____
SAMPLE INTERVAL _____
SAMPLE DESCRIPTION _____
SAMPLE APPEARANCE _____
ORGANIC VAPOR READING _____
SAMPLING PROBLEMS _____
CLEANING PERFORMED IN FIELD _____
COMMENTS _____

SAMPLE POINT _____ DATE _____ TIME _____
SAMPLE POINT DESCRIPTION _____
SAMPLE METHOD _____
SAMPLE INTERVAL _____
SAMPLE DESCRIPTION _____
SAMPLE APPEARANCE _____
ORGANIC VAPOR READING _____
SAMPLING PROBLEMS _____
CLEANING PERFORMED IN FIELD _____
COMMENTS _____

FORM COMPLETED BY: _____ DATE _____

Designation: D 4220 – 95

AMERICAN SOCIETY FOR TESTING AND MATERIALS
1916 Race St. Philadelphia, Pa 19103
Reprinted from the Annual Book of ASTM Standards. Copyright ASTM
If not listed in the current combined index, will appear in the next edition.

Standard Practices for Preserving and Transporting Soil Samples[1]

This standard is issued under the fixed designation D 4220; the number immediately following the designation indicates the year of original adoption or, in the case of revision, the year of last revision. A number in parentheses indicates the year of last reapproval. A superscript epsilon (ε) indicates an editorial change since the last revision or reapproval.

1. Scope*

1.1 These practices cover procedures for preserving soil samples immediately after they are obtained in the field and accompanying procedures for transporting and handling the samples.

1.2 *Limitations*—These practices are not intended to address requirements applicable to transporting of soil samples known or suspected to contain hazardous materials.

1.3 *This standard does not purport to address all of the safety concerns, if any, associated with its use. It is the responsibility of the user of this standard to establish appropriate safety and health practices and determine the applicability of regulatory limitations prior to use.* See Section 7.

2. Referenced Documents

2.1 *ASTM Standards:*

D 420 Guide to Site Characterization for Engineering, Design, and Construction Purposes[2]

D 653 Terminology Relating to Soil, Rock, and Contained Fluids[2]

D 1452 Practice for Soil Investigation and Sampling by Auger Borings[2]

D 1586 Test Method for Penetration Test and Split-Barrel Sampling of Soils[2]

D 1587 Practice for Thin-Walled Tube Sampling of Soils[2]

D 2488 Practice for Description and Identification of Soils (Visual-Manual Procedure)[2]

D 3550 Practice for Ring-Lined Barrel Sampling of Soils[2]

D 4564 Test Method for Density of Soil in Place by the Sleeve Method[2]

D 4700 Guide for Soil Sampling from the Vadose Zone[2]

3. Terminology

3.1 Terminology in these practices is in accordance with Terminology D 653.

4. Summary of Practices

4.1 The various procedures are given under four groupings as follows:

4.1.1 *Group A*—Samples for which only general visual identification is necessary.

4.1.2 *Group B*—Samples for which only water content and classification tests, proctor and relative density, or profile logging is required, and bulk samples that will be remolded or compacted into specimens for swell pressure, percent swell, consolidation, permeability, shear testing, CBR, stabilimeter, etc.

4.1.3 *Group C*—Intact, naturally formed or field fabricated, samples for density determinations; or for swell pressure, percent swell, consolidation, permeability testing and shear testing with or without stress-strain and volume change measurements, to include dynamic and cyclic testing.

4.1.4 *Group D*—Samples that are fragile or highly sensitive for which tests in Group C are required.

4.2 The procedure(s) to be used should be included in the project specifications or defined by the designated responsible person.

5. Significance and Use

5.1 Use of the various procedures recommended in these practices is dependent on the type of samples obtained (Practice D 420), the type of testing and engineering properties required, the fragility and sensitivity of the soil, and the climatic conditions. In all cases, the primary purpose is to preserve the desired inherent conditions.

5.2 The procedures presented in these practices were primarily developed for soil samples that are to be tested for engineering properties, however, they may be applicable for samples of soil and other materials obtained for other purposes.

6. Apparatus

6.1 The type of materials and containers needed depend upon the conditions and requirements listed under the four groupings A to D in Section 4, and also on the climate and transporting mode and distance.

6.1.1 *Sealing Wax*, includes microcrystalline wax, paraffin, beeswax, ceresine, carnaubawax, or combinations thereof.

6.1.2 *Metal Disks*, about 1/16 in. (about 2 mm) thick and having a diameter slightly less than the inside diameter of the tube, liner, or ring and to be used in union with wax or caps and tape, or both.

6.1.3 *Wood Disks*, prewaxed, 1 in. (25 mm) thick and having a diameter slightly less than the inside diameter of the liner or tube.

6.1.4 *Tape*, either waterproof plastic, adhesive friction, or duct tape.

6.1.5 *Cheesecloth*, to be used in union with wax in alternative layers.

6.1.6 *Caps*, either plastic, rubber or metal, to be placed

[1] These practices are under the jurisdiction of ASTM Committee D-18 on Soil and Rock and are the direct responsibility of Subcommittee D18.02 on Sampling and Related Field Testing for Soil Investigations.

Current edition approved April 15, 1995. Published June 1995. Originally published as D 4220 – 83. Last previous edition D 4220 – 89.

[2] *Annual Book of ASTM Standards*, Vol 04.08.

* A Summary of Changes section appears at the end of these practices.

over the end of thin-walled tubes (Practice D 1587), liners and rings (Practice D 3550), in union with tape or wax.

6.1.7 *O'ring (Sealing End Caps)*, used to seal the ends of samples within thin-walled tubes, by mechanically expanding an O'ring against the tube wall.

NOTE 1—Plastic expandable end caps are preferred. Metal expandable end caps seal equally well; however, long-term storage may cause corrosion problems.

6.1.8 *Jars*, wide mouthed, with rubber-ringed lids or lids lined with a coated paper seal and of a size to comfortably receive the sample, commonly ½ pt (250 mL), 1 pt (500 mL) and quart-sized (1000 mL).

6.1.9 *Bag*, either plastic, burlap with liner, burlap or cloth type (Practice D 1452).

6.1.10 *Packing Material*, to protect against vibration and shock.

6.1.11 *Insulation*, either granule (bead), sheet or foam type, to resist temperature change of soil or to prevent freezing.

6.1.12 *Sample Cube Boxes*, for transporting cube (block) samples. Constructed with ½ to ¾ in. (13 to 19 mm) thick plywood (marine type).

6.1.13 *Cylindrical Sample Containers*, somewhat larger in dimension than the thin-walled tube or liner samples, such as cylindrical frozen food cartons.

6.1.14 *Shipping Containers*, either box or cylindrical type and of proper construction to protect against vibration, shock, and the elements, to the degree required.

NOTE 2—The length, girth and weight restrictions for commercial transportation must be considered.

6.1.15 *Identification Material*—This includes the necessary writing pens, tags, and labels to properly identify the sample(s).

7. Precautions

7.1 Special instructions, descriptions, and marking of containers must accompany any sample that may include radioactive, chemical, toxic, or other contaminant material.

7.2 Interstate transportation containment, storage, and disposal of soil samples obtained from certain areas within the United States and the transportation of foreign soils into or through the United States are subject to regulations established by the U.S. Department of Agriculture, Animal, and Plant Health Service, Plant Protection and Quarantine Programs, and possibly to regulations of other federal, state, or local agencies.

7.2.1 Samples shipped by way of common carrier or U.S. Postal Service must comply with the Department of Transportation Hazardous Materials Regulation, 49CRF Part 172.

7.3 Sample traceability records (see Fig. 1) are encouraged and should be required for suspected contaminated samples.

7.3.1 The possession of all samples must be traceable, from collection to shipment to laboratory to disposition, and should be handled by as few persons as possible.

7.3.2 The sample collector(s) should be responsible for initiating the sample traceability record; recording the project, sample identification and location, sample type, date, and the number and types of containers.

7.3.3 A separate traceability record shall accompany each shipment.

7.3.4 When transferring the possession of samples the person(s) relinquishing and receiving the samples shall sign, date, record the time, and check for completeness of the traceability record.

8. Procedure

8.1 *All Samples*—Properly identify samples with tags, labels, and markings prior to transporting them as follows:

8.1.1 Job name or number, or both,

8.1.2 Sampling date,

8.1.3 Sample/boring number and location,

8.1.4 Depth or elevation, or both,

8.1.5 Sample orientation,

8.1.6 Special shipping or laboratory handling instructions, or both, including sampling orientation, and

8.1.7 Penetration test data, if applicable (Test Method D 1586).

8.1.8 Subdivided samples must be identified while maintaining association to the original sample.

8.1.9 If required, sample traceability record.

8.2 *Group A*—Transport samples in any type of container by way of available transportation. If transported commercially, the container need only meet the minimum requirements of the transporting agency and any other requirements necessary to assure against sample loss.

8.3 *Group B:*

8.3.1 Preserve and transport these samples in sealed, moistureproof containers. All containers shall be of sufficient thickness and strength to ensure against breakage and moisture loss. The container types include: plastic bags or pails, glass or plastic (provided they are waterproof) jars, thin walled tubes, liners, and rings. Wrap cylindrical and cube samples in suitable plastic film or aluminum foil, or both, (Note 3) and coat with several layers of wax, or seal in several layers of cheesecloth and wax.

8.3.2 Transport these samples by any available transportation. Ship these samples as prepared or placed in larger shipping containers, including bags, cardboard, or wooden boxes or barrels.

NOTE 3—Some soils may cause holes to develop in aluminum foil, due to corrosion. Avoid direct contact where adverse affects to sample composition are a concern.

8.3.3 *Plastic Bags*—Place the plastic bags as tightly as possible around the sample, squeezing out as much air as possible. They shall be 3 mil or thicker to prevent leakage.

8.3.4 *Glass-Plastic Jars*—If the jar lids are not rubber ringed or lined with new waxed paper seals, seal the lids with wax.

8.3.5 *Plastic Pails*—If the plastic pail lids are not air tight, seal them with wax or tape.

8.3.6 *Thin-Walled Tubes:*

8.3.6.1 *Expandable Packers*—The preferred method of sealing sample ends within tubes is with plastic, expandable packers.

8.3.6.2 *Wax With Disks*—For short-term sealing, paraffin wax is acceptable. For long term sealing (in excess of 3 days) use microcrystalline waxes or combine with up to 15% beeswax or resin, for better adherence to the wall of the tube and to reduce shrinkage. Several thin layers of wax are preferred over one thick layer. The minimum final thickness shall be 0.4 in. (10 mm).

8.3.6.3 *End Caps*—Seal metal, rubber, or plastic end caps with tape. For long term storage (longer than 3 days), also dip them in wax, applying two or more layers of wax.

8.3.6.4 *Cheesecloth and Wax*—Use alternating layers (a minimum of two each) of cheesecloth and wax to seal each end of the tube and stabilize the sample.

NOTE 4—Where necessary, spacers or appropriate packing materials, or both, must be placed prior to sealing the tube ends to provide proper confinement. Packing material must be nonabsorbent and must maintain its properties to provide the same degree of continued sample support.

8.3.7 *Liners and Rings*—Refer to 8.3.6.3 or 8.3.6.4.

8.3.8 *Exposed Samples:*

8.3.8.1 *Cylindrical, Cubical or Other Samples Wrapped in Plastic*, such as polyethylene and polypropylene, or foil should be further protected with a minimum of three coats of wax.

8.3.8.2 *Cylindrical and Cube Samples Wrapped in Cheesecloth and Wax*, shall be sealed with a minimum of three layers of each, placed alternatively.

8.3.8.3 *Carton Samples (Frozen Food Cartons)*—Samples placed in these containers must be situated so that wax can be poured completely around the sample. The wax should fill the void between the sample and container wall. The wax should be sufficiently warm to flow, but not so hot that it penetrates the pores of the soil. Generally, the samples should be wrapped in plastic or foil before being surrounded with wax.

8.4 *Group C:*

8.4.1 Preserve and seal these samples in containers as covered in 8.3. In addition, they must be protected against vibration and shock, and protected from extreme heat or cold.

8.4.2 Samples transported by the sampling or testing agency personnel on seats of automobiles and trucks need only be placed in cardboard boxes, or similar containers into which the sealed samples fit snugly, preventing bumping, rolling, dropping, etc.

8.4.3 For all other methods of transporting samples, including automobile trunk, bus, parcel services, truck, boat, air, etc., place the sealed samples in wood, metal, or other type of suitable shipping containers that provide cushioning or insulation, or both, for each sample and container. Avoid transporting by any agency whose handling of containers is suspect.

8.4.4 The cushioning material (sawdust, rubber, polystyrene, urethane foam, or material with similar resiliency) should completely encase each sample. The cushioning between the samples and walls of the shipping containers should have a minimum thickness of 1 in. (25 mm). A minimum thickness of 2 in. (50 mm) shall be provided on the container floor.

8.4.5 When required, the samples should be shipped in the same orientation in which they were sampled. Otherwise, special conditions shall be provided such as freezing, controlled drainage, or sufficient confinement, or a combination thereof, to maintain sample integrity.

8.5 *Group D:*

8.5.1 The requirements of 8.4 must be met, in addition to the following:

8.5.1.1 Samples should be handled in the same orientation in which they were sampled, including during transportation or shipping, with appropriate markings on the shipping container.

8.5.1.2 For all modes of private or commercial transportation, the loading, transporting and unloading of the shipment containers should be supervised as much as possible by a qualified person.

NOTE 5—A qualified person may be an engineer, geologist, soil scientist, soils technician or responsible person designated by the project manager.

8.6 *Shipping Containers* (see Figs. 2 to 7 for typical containers):

8.6.1 The following features should be included in the design of the shipping container for Groups C and D.

8.6.1.1 It should be reuseable,

8.6.1.2 It should be constructed so that the samples can be maintained, at all times, in the same position as when sampled or packed, or both,

8.6.1.3 It should include sufficient packing material to cushion or isolate, or both, the tubes from the adverse effect of vibration and shock, and

8.6.1.4 It should include sufficient insulating material to prevent freezing, sublimation and thawing, or undesirable temperature changes.

8.6.2 *Wood Shipping Containers:*

8.6.2.1 Wood is preferred over metal. Outdoor (marine) plywood having a thickness of ½ and ¾ in. (13 to 19 mm) may be used. The top (cover) should be hinged and latched, or fastened with screws.

8.6.2.2 The cushioning requirements are given in 8.4.4.

8.6.2.3 For protection against freezing or extreme temperature variation, the entire shipping container should be lined with a minimum insulation thickness of 2 in. (50 mm).

8.6.3 *Metal Shipping Containers*—The metal shipping containers must incorporate cushioning and insulation material to minimum thicknesses in accordance with 8.6.2, although slightly greater thicknesses would be appropriate. Alternatively, the cushion effect could be achieved with a spring suspension system, or any other means that would provide similar protection.

8.6.4 *Styrene Shipping Containers*—Bulk styrene with slots cut to the dimensions of the sample tube or liner. A protective outer box of plywood or reinforced cardboard is recommended.

8.6.5 *Other Containers*—Containers constructed with laminated fiberboard, plastic or reinforced cardboard outer walls, and properly lined, may also be used.

9. Reporting

9.1 The data obtained in the field shall be recorded and should include the following:

9.1.1 Job name or number, or both,

9.1.2 Sampling date(s),

9.1.3 Sample/boring number(s) and location(s),

9.1.4 Depth(s) or elevation(s), or both,

9.1.5 Sample orientation,

Sample Identification/Traceability Record
(Controlled Document)

Project: _____ W.O. # _____
Shipped by: _____
Shipped to: _____ Attention of:
Comments: _____ Hazardous materials suspected? (yes/no)

Sampling Point	Location	Field ID #	Date	Sample Type	No. of Containers	Analysis/Test Required	(optional) Lab ID

Sampler(s) (signature) _____

Field ID	Relinquished by: (signature)	Date/Time		Received by: (signature)	Date/Time		Comments

Shipment prepared by: (signature) _____ Date/Time _____ Shipment method: _____
Received for Lab by: (signature) _____ Date/Time _____ Comments _____
Receiving Laboratory: Please return original form after signing for receipt of samples.

FIG. 1 Example Layout of Record Form

FIG. 7 Example Layout of Sample Traceability Form

9.1.6 Groundwater observation, if any,
9.1.7 Method of sampling, and penetration test data, if applicable,
9.1.8 Sample dimensions,
9.1.9 Soil description (Practice D 2488),
9.1.10 Names of technician/crewman, engineer, project chief, etc.,
9.1.11 Comments regarding contaminated or possible contaminated samples,
9.1.12 If used, a copy of traceability records,
9.1.13 Weather conditions, and
9.1.14 General remarks.

10. Precision and Bias

10.1 This practice provides qualitative and general information only. Therefore, a precision and bias statement is not applicable.

11. Keywords

11.1 preservation; soil samples; transportation

SUMMARY OF CHANGES

This section identifies the location of changes to these practices that have been incorporated since the last issue. Committee D-18 has highlighted those changes that affect the technical interpretation or use of these practices.

(1) Section 11 was added since the last revision.
(2) Section 2 was expanded since the last revision.

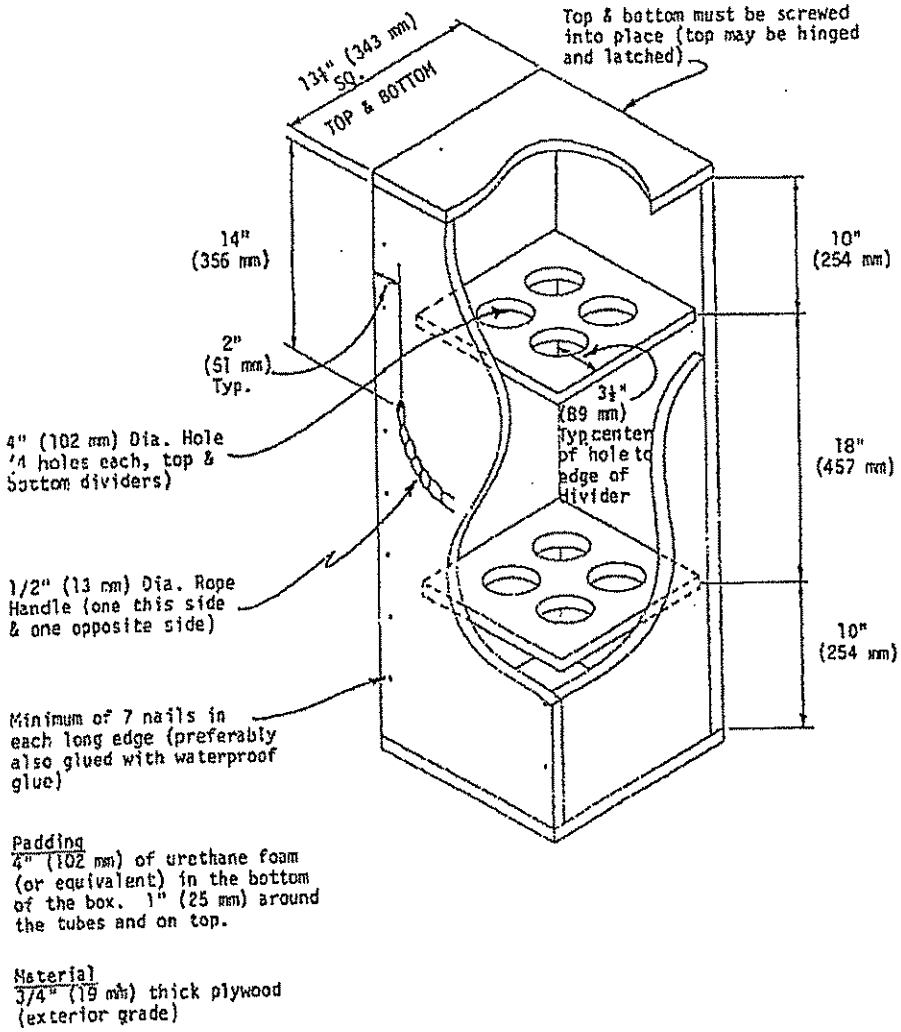

Padding
4" (102 mm) of urethane foam (or equivalent) in the bottom of the box. 1" (25 mm) around the tubes and on top.

Material
3/4" (19 mm) thick plywood (exterior grade)

FIG. 2 Shipping Box for 3-in. (76-mm) Thin-Walled Tubes

(a) Photo of Open Box For 5" (127 mm) Tubes

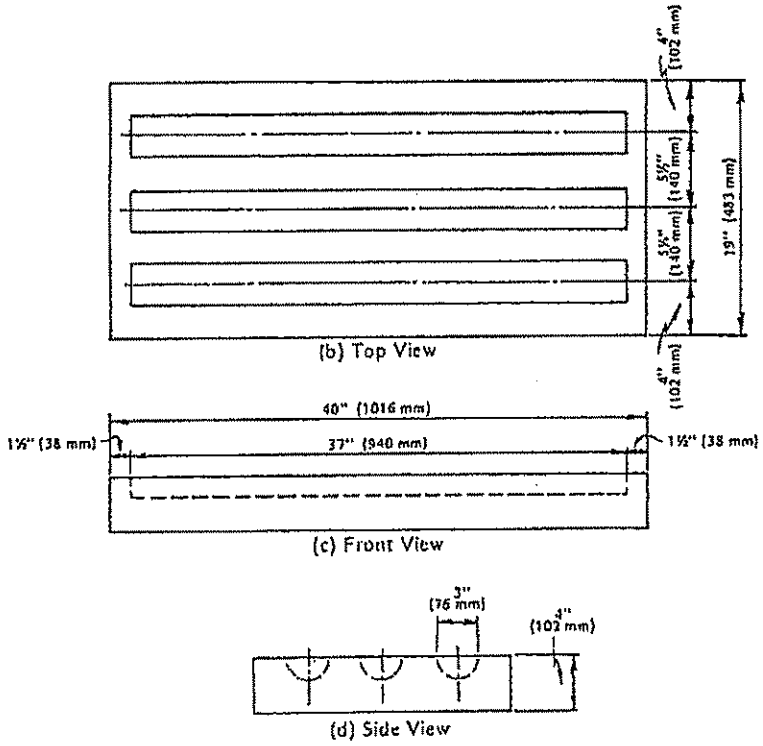

(b) Top View

(c) Front View

(d) Side View

NOTE—Top and bottom halves are identical.

FIG. 3 Styrene Shipping Container for 3-in. (76-mm) Thin-Walled Tubes

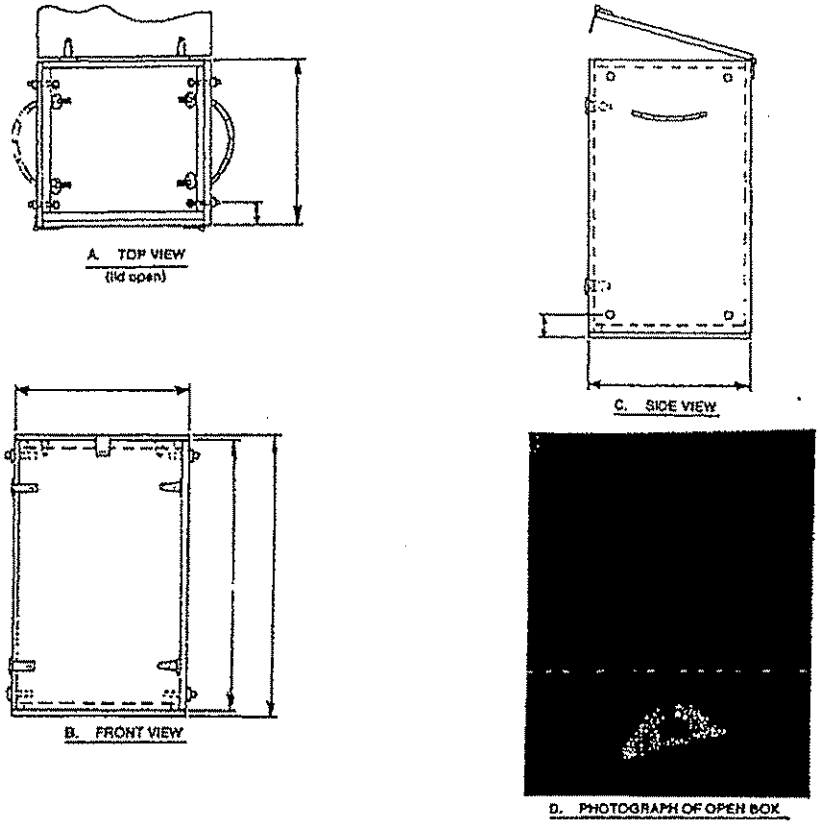

BILL OF MATERIALS

Item No.	Description of Item	Quantity
1	*Plywood*, 4 ft by 8 ft by ¾ in. (1220 mm by 2440 mm by 19.1 mm) exterior, Grade AC	1 Sheet
2	*Hinge*, strap, 4 in. (102 mm), heavy duty with screws	4 Each
3	*Hasp*, hinged, 4½ in. (114 mm), with screws	3 Each
4	*Screw, Wood, Steel, Flathead*, No. 10 by 1¾ in. (44.5 mm)	72 Each
5	*Bolt, Machine*, ⅜ in. (9.5 mm), with nut to secure hasps	3 Each
6	*Washer*, flat, ⅜ in. (9.5 mm)	3 Each
7	*Eye Bolt*, ½ by 2 in. (6.4 mm by 51 mm), zinc-plated, with nut	8 Each
8	*Washer*, flat, ¼ in. (6.4 mm), for hasp bolt	8 Each
9	*S Hooks*, 2 in. (51 mm), open, zinc-plated	8 Each
10	*Clamp*, adjustable, hose, steel, worm screw adjustment	2 Each
11	*Spring*, expansion	8 Each
12	*Adhesive*, woodworking	1 lb (454 g)
13	*Rope*, nylon, ½-in. (12.7-mm) diameter, solid braided	5 ft (1524 mm)
14	*Cushioning Material*, expanded polystyrene foam	10 ft³ (0.28 m³)

NOTES—(a) All wooden components can be sawed from one sheet of plywood.
(b) This shipping box will accommodate approximately three 3-in. (76-mm) diameter tubes or two 5-in (127-mm) diameter tubes up to 30 in. (762 mm) in length. For longer tubes the inside height of the box must be a minimum of 6-in. (152 mm) greater than the length of the tube.
(c) All joints to be glued and fastened with screws.
(d) Stencil all sides as follows (See Views B and C).
TO PROTECT FROM FREEZING
(e) After suspending samples as indicated above, all void space must be filled with a suitable resilient packing material.

FIG. 4 Suspension System Container for Thin-Walled Tubes

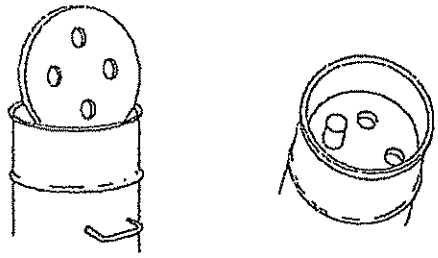

(a) 55-gallon (0.21 m^3) oil barrels with sections of styrofoam insulation; welded handles on each side.

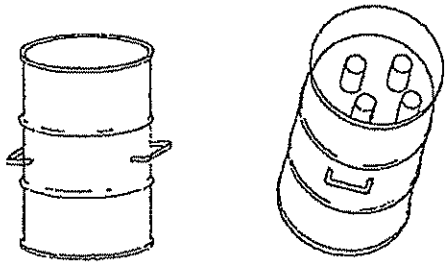

(b) Same as (a) showing barrel ready for shipment. Steel lids bolted on to provide tight seal.

NOTE—Two in. (51 mm) of foam rubber covers 2 in. of styrofoam at the base. One in. (25 mm) of foam rubber overlays the top of the tubes, and the remaining space to the lid is filled with styrofoam.

FIG. 5 Shipping Barrel for Thin-Walled Tubes

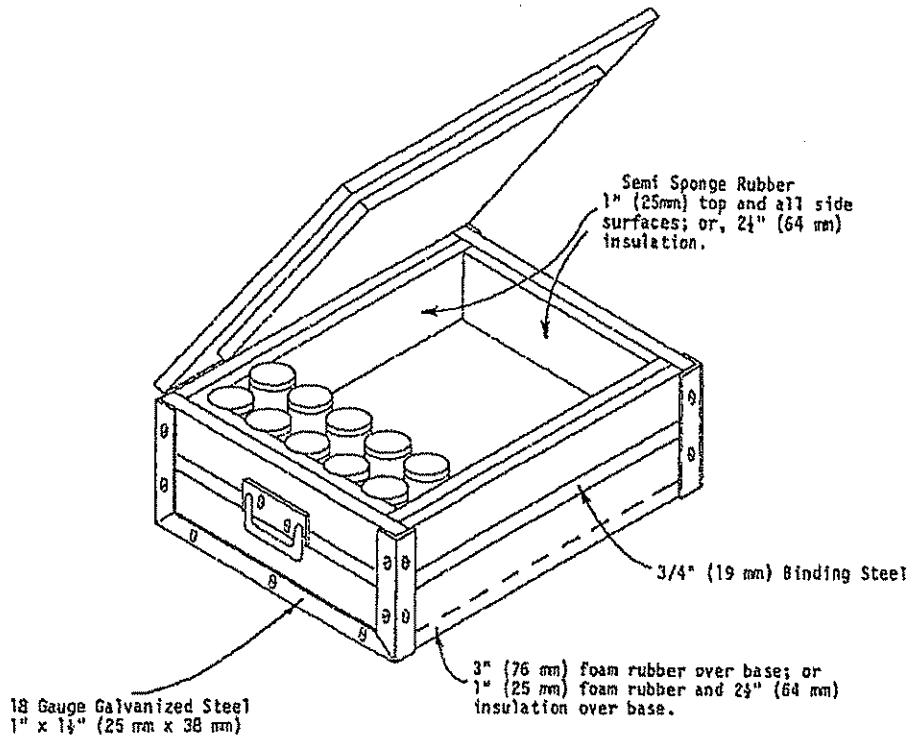

FIG. 8 Shipping Box for Liner (Short Tube) or Ring Samples

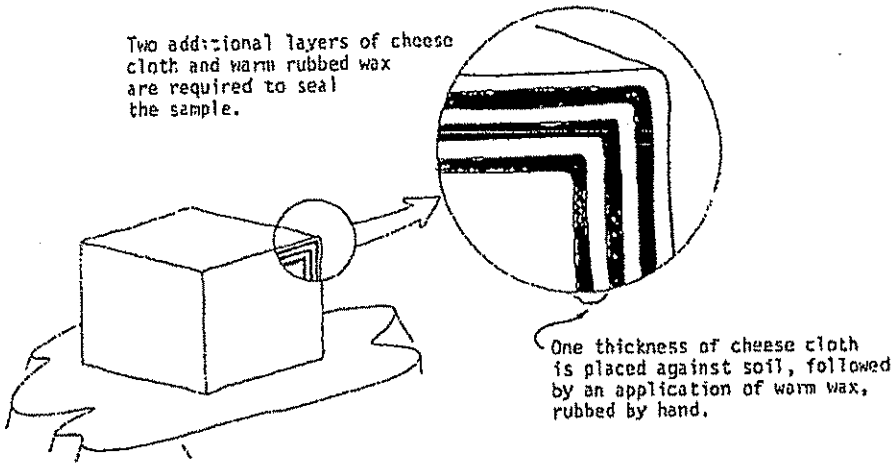

A. METHOD FOR SEALING HAND-CUT UNDISTURBED SAMPLES

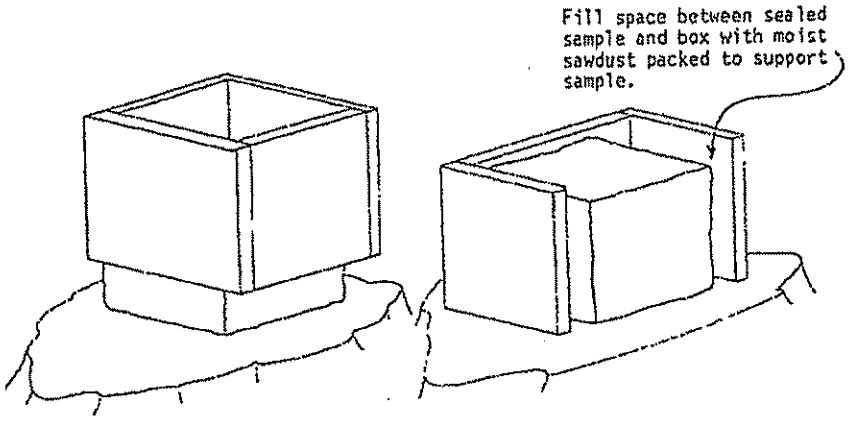

B. ENCASE EASILY DISTURBED SAMPLES IN BOX PRIOR TO CUTTING

Box constructed with 1/2"-3/4" (13 - 19 mm) exterior plywood.

FIG. 7 Preparing and Packaging a Block Sample

The American Society for Testing and Materials takes no position respecting the validity of any patent rights asserted in connection with any item mentioned in this standard. Users of this standard are expressly advised that determination of the validity of any such patent rights, and the risk of infringement of such rights, are entirely their own responsibility.

This standard is subject to revision at any time by the responsible technical committee and must be reviewed every five years and if not revised, either reapproved or withdrawn. Your comments are invited either for revision of this standard or for additional standards and should be addressed to ASTM Headquarters. Your comments will receive careful consideration at a meeting of the responsible technical committee, which you may attend. If you feel that your comments have not received a fair hearing you should make your views known to the ASTM Committee on Standards, 1916 Race St., Philadelphia, PA 19103.

E.552
Field Headspace Screening – Soil / Photoionization Detector

LAST REVISED: October 2001

OBJECTIVE

To provide a qualitative and limited quantitative field screening of soil samples to aid in the evaluation of soil for the presence of volatile or semi-volatile organic chemicals.

The procedure is premised on the physical property of volatile compounds to move from the soil matrix to the airborne state as vapor. The amount of airborne material as vapor will be a relative concentration between samples if the volume of sample, volume of air, temperature and period of testing remain reasonably constant. The measurement is semi-quantitative for qualitative decision-making.

Measurements cannot be used as the sole indicator of soil contamination or in lieu of prescribed laboratory chemical testing for purposes of regulatory compliance. This procedure is only to be used for sites involving volatile organic compounds, including PCE. This procedure is not to be used for purposes of health and safety monitoring.

EQUIPMENT

- Calibration gas from manufacturer
- Photoionization detector equipped with 10.0 eV lamp or greater.
- Test chamber, reusable or disposable, examples:
    - Mason jar with aluminum foil
    - Mason jar equipped with charcoal filter
    - Ziploc® bags or other sealable container of at least 500 cubic centimeters to provide a fixed headspace volume for constancy between tests
    - Rigid, disposable concrete test cylinder mold with plastic cap
- Forms and indelible ink pen
- Surgical gloves

PROCEDURES

On a daily basis, the unit should be gas calibrated to a manufacturer's gas standard and the results recorded in the field logbook. If the unit does not calibrate, return it to the local Terracon equipment evaluation for evaluation and, if necessary, repair.

Immediately prior to making a field measurement the unit should be operated for approximately 1 minute and any background concentrations noted or zeroed out relative to measurements.

Prior to site testing an empty, unused test chamber should be sealed containing nothing but ambient air and allowed to stabilize for 1 minute. Test the chamber headspace to identify background contaminants contributed by the chamber itself. If anything is detected, change to another type of chamber which is inert relative to contributing ionizable materials to the headspace.

- Transfer soil sample representative of the condition to be measured from the sampling device to testing chamber (e.g., mason jar covered by aluminum foil, disposal concrete cylinder mold, Ziplock® bag, or other sealable container).
- Sample material should be representative of the vertical and horizontal cross-section of the sampled interval.
- The volume of soil should remain as constant as is practical for all site tests.
- The soil volume should not exceed 25% of the total volume of the air-filled testing chamber.
- Immediately seal the chamber after transfer and allow the sample to equilibrate for a minimum of 15 minutes at ambient temperatures above 50° F.
- Insert probe into sealed container for reading for 1 minute for volatile compounds of concern and 3 minutes for semi-volatile compounds of concern to account for varied response times.
- Record highest reading obtained as parts per million (ppm) calibration gas equivalents (i.e., TEI580 calibrated to isobutylene would be expressed as ppmi) .

SAMPLE DISPOSAL

Soil samples should be returned to the site and included in auger soil or excavation soil for proper disposal.

DOCUMENTATION

Record the highest reading in calibration gas equivalents on forms provided by the Project Manager or in the field log book. Pertinent data will vary based on the parameter and the form; however, the following data must be recorded; date, job number, project name, sampling location, sample interval (if appropriate) sample identification, samplers name, and general observations.

OTHER SUPPORTING DOCUMENTS

- **Thermo Environmental Instruments, Inc.** *OVM/Datalogger Model 580B Operating Manual*

E.30
CHAIN OF CUSTODY DOCUMENTATION

Last Revision: November 2001

OBJECTIVE AND APPLICATION

This document defines standard operating procedures for documenting sample collection using proper chain-of-custody techniques. The purpose of proper chain-of-custody techniques is to provide accountability for and documentation of sample integrity from the time samples are collected until sample disposal.

This procedure is intended to document sample possession during each stage of a sample's life cycle, that is, during collection, shipment, storage, and the process of analysis.

EQUIPMENT

- Terracon chain-of-custody record(s) or laboratory-specific chain-of-custody forms (typically supplied with sample containers),
- If samples are being shipped via courier, custody seals for coolers,
- Indelible ink marker, and
- Ziplock bag.

PROCEDURE

Sample containers will be labeled in advance of sampling with the sample date, location (well identifier), sampler's initials, and project name. Written sample custody procedures will be followed whenever samples are collected, transferred, stored, analyzed, or destroyed, in order to trace possession and handling of a sample from collection to disposal. Accountability for a sample begins when the sample is collected. Each sample will be accounted for with the use of sample labels, chain-of-custody forms, a record of sample collection, and field data notebooks.

The following chain-of-custody procedures will be implemented by the field staff:

- Entries in the field notebook and chain-of-custody form will be made in ink. Documentation of each sample must be completed at the time of sampling.
- The chain-of-custody should include at a minimum:
  - Project name and/or number
  - Name and contact information for the sampler collector
  - Collector's signature
  - Sample designation

  - Date sampled
  - Time sampled
  - Sample media
  - Number and size of containers for each sample
  - Types of sample preservatives used
  - Analyses requested
- The original chain-of-custody must accompany the samples at all times after collection, until receipt at the analytical laboratory. A copy of the chain-of-custody form will be kept by the field staff until filing at the office.
- The original chain-of-custody form should be sealed in a Ziplock bag if shipping samples on ice via courier. The sealed Ziplock bag will protect the document from moisture that may be present due to sample preservation. The chain-of-custody should be the last item packed in a sample cooler, so that it is easily accessible if the cooler is misplaced by the courier or shipped to an incorrect address.
- If shipping samples, a chain-of-custody specific to the contents of each cooler will be packaged with the respective samples. Chain-of-custody forms should not be shipped in separate containers than the samples they document. At least one custody seal should be completed by the collector and applied to each cooler sent to the laboratory. The custody seal should be affixed to the cooler in such a manner as to ensure breakage of the seal upon opening of the cooler (e.g., across the cooler lid opening).
- When the possession of samples is transferred, the individuals relinquishing and receiving the samples will sign, date, and note the time on the chain-of-custody form.
- If samples are shipped, strict chain-of-custody is violated. However at the discretion of the project manager the procedures can still be followed.

ATTACHED REFERENCES

Terracon Form COC-7/92 *Chain-of-Custody Record*, revised 4/93

Quality Environmental Containers *Custody Seal*

OTHER SUPPORTING DOCUMENTS

ASTM D4840-99 *Standard Guide for Sampling Chain-of-Custody Procedures*

Chain of Custody
Page 1 of ___

Company Name/Address

Terracon - Lenexa
13910 West 96th Terrace
Lenexa, Kansas 66215

Alternate billing information

Report to: Brian Conrad

Email to: bmconrad@terracon.com

Prepared by:

ENVIRONMENTAL Science corp
12065 Lebanon Road
Mt. Juliet TN 37122
Phone (615)758-5858
Phone (800) 767-5859
FAX (615)758-5859

Project Description ~~Goldwell Recycling Center BTA~~ 7700 Cottonwood Project BTA

City/state Collected: Lenexa, KS

PHONE: 913-492-7777
FAX: 913-492-7443

Client Project # 02047140

Lab Project #

Collected by: B. Conrad

Site/Facility ID#

P.O.#

Collected by(signature):

Packed on Ice N Y

Rush? (Lab MUST be Notified)
___Same Day.....200%
___Next Day.....100%
___Two Day.....50%

Date Results Needed: 2-7-05

Email? ___No ___Yes
FAX? ___No ___Yes

Quote #

TERRKLS

Template/Prelogin

Shipped Via:

Sample ID	Comp/Grab	Matrix*	Depth	Date	Time	No of Cntrs	GRO	OA 2 - DRO	SVOC	Kera Metals - Gold/7470	Chloride	Lead - GRO	Remarks/contaminant	Sample # (lab only)
P-26 (4-8)	Comp	SS	4-8'	1-27-05	12:50	2	X	X	X	X				[illegible]
P-20 (4-8)			4-8'	1-25-05	10:42	3	X	X	X	X				[illegible]
P-17 (4-8)			4-8'	1-26-05	08:40	3	X	X	X	X				[illegible]
P-13 (0-4)			0-4'	1-26-05	10:35	3	X	X	X			X		[illegible]
P-14 (8-12)			8-12'	1-26-05	12:00	3	X	X	X	X				[illegible]
GRAB-2			0'	1-27	15:45	2	X	X						[illegible]
P-13 (8-12)			8-12'	1-26-04	10:45	3	X	X				X		[illegible]
GRAB-1			0'	1-27	15:25	2				X	X			[illegible]
P-1 (0-4)			0-4'	1-27-05	13:25	1				X				[illegible]

*Matrix: SS-Soil/Solid GW-Groundwater WW-Wastewater DW-Drinking Water OT- Other_____

pH_____ Temp_____
Flow_____ Other_____

Remarks:

Relinquisher by:(Signature	Date:	Time:	Received by:(Signature	Samples returned via: FedEx__ UPS__ Other X SWA
Relinquisher by:(Signature	Date:	Time:	Received by: (Signature)	Temp: 3.2°C Bottles Received: 119
Relinquisher by:(Signature	Date:	Time:	Received for lab by: (Signature)	Date: 1/28/05 Time: 10:00 AM

Condition: (lab use only)
COC Seal Present: Y
COC Signature: Y

CUSTODY SEAL

DATE

SIGNATURE

QEC

Quality Environmental Containers

800-255-3950 • 304-255-3900

Terracon-Lenexa

Prepared by Environmental Science Corp

Project: 7700 Cottonwood Project BTA

Project #: 02047140

Sample Location/ID: SB-1

Analysis Reqd: VOC- 8260

Date: 6-1-05 Time: 15:30

Terracon-Lenexa

Prepared by Environmental Science Corp

Project: _____

Project #: _____

Sample Location/ID: _____

Analysis Reqd: _____

Date: _____ Time: _____

Terracon-Lenexa

Prepared by Environmental Science Corp

Project: _____

Project #: _____

Sample Location/ID: _____

Analysis Reqd: _____

Date: _____ Time: _____

E.150
SOIL SAMPLING
Low-Level Volatile / Terra Core™

Last Revision: March 15, 2001

Objective and Application:
To provide standard procedure for sample collection in conditions in which low concentrations of volatile organic compounds are anticipated in soils which minimizes handling and volatilization from the samples. The methods will provide representative samples for laboratory analysis using EPA Standard Method SW-846 5035.

This application uses proprietary commercial equipment and materials which will be purchased from an authorized vendor.

Equipment:

- Commercial Low-Level Terra Core™ Kits, each to include:
  - 8 disposable Terra Core™ Samplers
  - 16 tared 40-milliliter (ml) Volatile Organic Analysis (VOA) vials containing 5 mls of sodium bisulfate solution and integral stir bars
  - 8 tared 40-ml VOA vials containing methanol
  - 8 two ounce dry weight jars with lids
  - 8 zippered plastic bags
- Disposable gloves.
- Chain of Custody.
- Stable field platform to support test kit, screened from wind and elements.

Procedures:
Set up the working platform on a stable surface or in the field vehicle remote from fuel, exhaust or other contaminant sources. Cover the platform and secure with disposable plastic sheeting.

At each location prior to collecting the soil sample, put on a clean pair of disposable gloves.

Have ready a 40ml glass VOA vial containing the appropriate preservative. With the plunger seated in the handle, push the Terra

Core™ into freshly exposed soil until the sample chamber is filled. A filled chamber will deliver approximately 5 grams of soil.

Wipe all soil or debris from the outside of the Terra Core™ sampler. Immediately cap the end of the plunger with clean cap provided. The soil plug should be flush with the mouth of the sampler. Remove any excess soil that extends beyond the mouth of the sampler.

Rotate the plunger that was seated in the handle top 90° until it is aligned with the slots in the body. Place the mouth of the sampler into the 40ml VOA vial containing the appropriate preservative, and extrude the sample by pushing the plunger down. Quickly place the lid back on the 40ml VOA vial. When capping the 40ml VOA vial, be sure to remove any soil or debris from the threads of the vial.

Label with a non-solvent-based permanent marker. Place in the zippered bags provided.

Pack well in the kit box provided by the manufacturer. Place the kit box in a large capacity Ziplock® freezer bag and seal. Avoid use of tape and a plastic bag as this method deals specifically with low-level volatile testing.

Place in the cooler filled with ice and pack suitable for overnight courier shipping.

Other Supporting Documents :

- **TerraCore™ Internet Website at http://www.ennovativetech.com/TC_sampler_kit.htm**
  En Novative Technologies, Inc.
  Phone:(920)465-3960
  Fax: (920)465-3963
  Toll Free: 888-411-0757
  Procedures by En Novative Technologies, Inc. 1999-2000, Modified: March 13, 2001

- **Alternative EPA Method 5035 Sampling as EnCore**

- **USEPA SW-846 Method 5035 For Organic Analytes Using Closed-System Purge-and-Trap and Extraction for Volatile Organics in Soil and Waste Samples**
  Test methods for Evaluating Solid Waste – Volume I, EPA Document #SW-846, United States Environmental Protection Agency, Office of Solid Waste and Emergency Response, Section B, Chapter Four.

METHOD 5035

CLOSED-SYSTEM PURGE-AND-TRAP AND EXTRACTION FOR VOLATILE ORGANICS IN SOIL AND WASTE SAMPLES

1.0 SCOPE AND APPLICATION

1.1 This method describes a closed-system purge-and-trap process for the analysis of volatile organic compounds (VOCs) in solid materials (e.g., soils, sediments, and solid waste). While the method is designed for use on samples containing low levels of VOCs, procedures are also provided for collecting and preparing solid samples containing high concentrations of VOCs and for oily wastes. For these high concentration and oily materials, sample collection and preparation are performed using the procedures described here, and sample introduction is performed using the aqueous purge-and-trap procedure in Method 5030. These procedures may be used in conjunction with any appropriate determinative gas chromatographic procedure, including, but not limited to, Methods 8015, 8021, and 8260.

1.2 The low soil method utilizes a hermetically-sealed sample vial, the seal of which is never broken from the time of sampling to the time of analysis. Since the sample is never exposed to the atmosphere after sampling, the losses of VOCs during sample transport, handling, and analysis are negligible. The applicable concentration range of the low soil method is dependent on the determinative method, matrix, and compound. However, it will generally fall in the 0.5 to 200 µg/kg range.

1.3 Procedures are included for preparing high concentration samples for purging by Method 5030. High concentration samples are those containing VOC levels of >200 µg/kg.

1.4 Procedures are also included for addressing oily wastes that are soluble in a water-miscible solvent. These samples are also purged using Method 5030..

1.5 Method 5035 can be used for most volatile organic compounds that have boiling points below 200°C and that are insoluble or slightly soluble in water. Volatile, water-soluble compounds can be included in this analytical technique. However, quantitation limits (by GC or GC/MS) are approximately ten times higher because of poor purging efficiency.

1.6 Method 5035, in conjunction with Method 8015 (GC/FID), may be used for the analysis of the aliphatic hydrocarbon fraction in the light ends of total petroleum hydrocarbons, e.g., gasoline. For the aromatic fraction (BTEX), use Method 5035 and Method 8021 (GC/PID). A total determinative analysis of gasoline fractions may be obtained using Method 8021 in series with Method 8015.

1.7 As with any preparative method for volatiles, samples should be screened to avoid contamination of the purge-and-trap system by samples that contain very high concentrations of purgeable material above the calibration range of the low concentration method. In addition, because the sealed sample container cannot be opened to remove a sample aliquot without compromising the integrity of the sample, multiple sample aliquots should be collected to allow for screening and reanalysis.

1.8 The closed-system purge-and-trap equipment employed for low concentration samples is not appropriate for soil samples preserved in the field with methanol. Such samples should be analyzed using Method 5030 (see the note in Sec. 6.2.2).

1.9 This method is restricted to use by or under the supervision of trained analysts. Each analyst must demonstrate the ability to generate acceptable results with this method.

2.0 SUMMARY OF METHOD

2.1 Low concentration soil method - generally applicable to and soils and other solid samples with VOC concentrations in the range of 0.5 to 200 µg/kg.

Volatile organic compounds (VOCs) are determined by collecting an approximately 5-g sample, weighed in the field at the time of collection, and placing it in a pre-weighed vial with a septum-sealed screw-cap (see Sec. 4) that already contains a stirring bar and a sodium bisulfate preservative solution. The vial is sealed and shipped to a laboratory or appropriate analysis site. The entire vial is then placed, unopened, into the instrument carousel. Immediately before analysis, organic-free reagent water, surrogates, and internal standards (if applicable) are automatically added without opening the sample vial. The vial containing the sample is heated to 40°C and the volatiles purged into an appropriate trap using an inert gas combined with agitation of the sample. Purged components travel via a transfer line to a trap. When purging is complete, the trap is heated and backflushed with helium to desorb the trapped sample components into a gas chromatograph for analysis by an appropriate determinative method.

2.2 High concentration soil method - generally applicable to soils and other solid samples with VOC concentrations greater than 200 µg/kg.

The sample introduction technique in Sec. 2.1 is not applicable to all samples, particularly those containing high concentrations (generally greater than 200 µg/kg) of VOCs which may overload either the volatile trapping material or exceed the working range of the determinative instrument system (e.g., GC/MS, GC/FID, GC/EC, etc.). In such instances, this method describes two sample collection options and the corresponding sample purging procedures.

2.2.1 The first option is to collect a bulk sample in a vial or other suitable container without the use of the preservative solution described in Sec. 2.1. A portion of that sample is removed from the container in the laboratory and is dispersed in a water-miscible solvent to dissolve the volatile organic constituents. An aliquot of the solution is added to 5 mL of reagent water in a purge tube. Surrogates and internal standards (if applicable) are added to the solution, then purged using Method 5030, and analyzed by an appropriate determinative method. Because the procedure involves opening the vial and removing a portion of the soil, some volatile constituents may be lost during handling.

2.2.2 The second option is to collect an approximately 5-g sample in a pre-weighed vial with a septum-sealed screw-cap (see Sec 4) that contains 5 mL of a water-miscible organic solvent (e.g., methanol). At the time of analysis, surrogates are added to the vial, then an aliquot of the solvent is removed from the vial, purged using Method 5030 and analyzed by an appropriate determinative method.

2.3 High concentration oily waste method - generally applicable to oily samples with VOC concentrations greater than 200 µg/kg that can be diluted in a water-miscible solvent.

Samples that are comprised of oils or samples that contain significant amounts of oil present additional analytical challenges. This procedure is generally appropriate for such samples when they are soluble in a water-miscible solvent.

2.3.1 After demonstrating that a test aliquot of the sample is soluble in methanol or polyethylene glycol (PEG), a separate aliquot of the sample is spiked with surrogates and diluted in the appropriate solvent. An aliquot of the solution is added to 5 mL of reagent water in a purge tube, taking care to ensure that a floating layer of oil is not present in the purge tube. Internal standards (if applicable) are added to the solution which is then purged using Method 5030 and analyzed by an appropriate determinative method.

2.3.2 Samples that contain oily materials that are not soluble in water-miscible solvents must be prepared according to Method 3585.

3.0 INTERFERENCES

3.1 Impurities in the purge gas and from organic compounds out-gassing from the plumbing ahead of the trap account for the majority of contamination problems. The analytical system must be demonstrated to be free from contamination under the conditions of the analysis by running method blanks. The use of non-polytetrafluoroethylene (non-PTFE) plastic coating, non-PTFE thread sealants, or flow controllers with rubber components in the purging device must be avoided, since such materials out-gas organic compounds which will be concentrated in the trap during the purge operation. These compounds will result in interferences or false positives in the determinative step.

3.2 Samples can be contaminated by diffusion of volatile organics (particularly methylene chloride and fluorocarbons) through the septum seal of the sample vial during shipment and storage. A trip blank prepared from organic-free reagent water and carried through sampling and handling protocols serves as a check on such contamination.

3.3 Contamination by carryover can occur whenever high-concentration and low-concentration samples are analyzed in sequence. Where practical, samples with unusually high concentrations of analytes should be followed by an analysis of organic-free reagent water to check for cross-contamination. If the target compounds present in an unusually concentrated sample are also found to be present in the subsequent samples, the analyst must demonstrate that the compounds are not due to carryover. Conversely, if those target compounds are <u>not</u> present in the subsequent sample, then the analysis of organic-free reagent water is not necessary.

3.4 The laboratory where volatile analysis is performed should be completely free of solvents. Special precautions must be taken to determine methylene chloride. The analytical and sample storage area should be isolated from all atmospheric sources of methylene chloride, otherwise random background levels will result. Since methylene chloride will permeate through PTFE tubing, all GC carrier gas lines and purge gas plumbing should be constructed of stainless steel or copper tubing. Laboratory workers' clothing previously exposed to methylene chloride fumes during common liquid/liquid extraction procedures can contribute to sample contamination. The presence of other organic solvents in the laboratory where volatile organics are analyzed will also lead to random background levels and the same precautions must be taken.

4.0 APPARATUS AND MATERIALS

4.1 Sample Containers

The specific sample containers required will depend on the purge-and-trap system to be employed (see Sec. 4.2). Several systems are commercially available. Some systems employ 40-mL clear vials with a special frit and equipped with two PTFE-faced silicone septa. Other

systems permit the use of any good quality glass vial that is large enough to contain at least 5 g of soil or solid material and at least 10 mL of water and that can be sealed with a screw-cap containing a PTFE-faced silicone septum. Consult the purge-and-trap system manufacturer's instructions regarding the suitable specific vials, septa, caps, and mechanical agitation devices.

4.2 Purge-and-Trap System

The purge-and-trap system consists of a unit that automatically adds water, surrogates, and internal standards (if applicable) to a vial containing the sample, purges the VOCs using an inert gas stream while agitating the contents of the vial, and also traps the released VOCs for subsequent desorption into the gas chromatograph. Such systems are commercially available from several sources and shall meet the following specifications.

4.2.1 The purging device should be capable of accepting a vial sufficiently large to contain a 5-g soil sample plus a magnetic stirring bar and 10 mL of water. The device must be capable of heating a soil vial to 40°C and holding it at that temperature while the inert purge gas is allowed to pass through the sample. The device should also be capable of introducing at least 5 mL of organic-free reagent water into the sample vial while trapping the displaced headspace vapors. It must also be capable of agitating the sealed sample during purging, (e.g., using a magnetic stirring bar added to the vial prior to sample collection, sonication, or other means). The analytes being purged must be quantitatively transferred to an absorber trap. The trap must be capable of transferring the absorbed VOCs to the gas chromatograph (see 4.2.2).

NOTE: The equipment used to develop this method was a Dynatech PTA-30 W/S Autosampler. This device was subsequently sold to Varian, and is now available as the Archon Purge and Trap Autosampler. See the Disclaimer at the front of this manual for guidance on the use of alternative equipment.

4.2.2 A variety of traps and trapping materials may be employed with this method. The choice of trapping material may depend on the analytes of interest. Whichever trap is employed, it must demonstrate sufficient adsorption and desorption characteristics to meet the quantitation limits of all the target analytes for a given project and the QC requirements in Method 8000 and the determinative method. The most difficult analytes are generally the gases, especially dichlorodifluoromethane. The trap must be capable of desorbing the late eluting target analytes.

NOTE: Check the responses of the brominated compounds when using alternative charcoal traps (especially Vocarb 4000), as some degradation has been noted when higher desorption temperatures (especially above 240 - 250°C) are employed. 2-Chloroethyl vinyl ether is degraded on Vocarb 4000 but performs adequately when Vocarb 3000 is used. The primary criterion, as stated above, is that all target analytes meet the sensitivity requirements for a given project.

4.2.2.1 The trap used to develop this method was 25 cm long, with an inside diameter of 0.105 inches, and was packed with Carbopack/Carbosieve (Supelco, Inc.).

4.2.2.2 The standard trap used in other EPA purge-and-trap methods is also acceptable. That trap is 25 cm long and has an inside diameter of at least 0.105 in. Starting from the inlet, the trap contains the equal amounts of the adsorbents listed below. It is recommended that 1.0 cm of methyl silicone-coated packing (35/60 mesh, Davison, grade 15 or equivalent) be inserted at the inlet to extend the life of the trap. If

the analysis of dichlorodifluoromethane or other fluorocarbons of similar volatility is not required, then the charcoal can be eliminated and the polymer increased to fill 2/3 of the trap. If only compounds boiling above 35°C are to be analyzed, both the silica gel and charcoal can be eliminated and the polymer increased to fill the entire trap.

4.2.2.2.1 2,6-Diphenylene oxide polymer - 60/80 mesh, chromatographic grade (Tenax GC or equivalent).

4.2.2.2.2 Methyl silicone packing - OV-1 (3%) on Chromosorb-W, 60/80 mesh or equivalent.

4.2.2.2.3 Coconut charcoal - Prepare from Barnebey Cheney, CA-580-26, or equivalent, by crushing through 26 mesh screen.

4.2.2.3 Trapping materials other than those listed above also may be employed, provided that they meet the specifications in Sec. 4.2.3, below.

4.2.3 The desorber for the trap must be capable of rapidly heating the trap to the temperature recommended by the trap material manufacturer, prior to the beginning of the flow of desorption gas. Several commercial desorbers (purge-and-trap units) are available.

4.3 Syringe and Syringe Valves

4.3.1 25-mL glass hypodermic syringes with Luer-Lok (or equivalent) tip (other sizes are acceptable depending on sample volume used).

4.3.2 2-way syringe valves with Luer ends.

4.3.3 25-µL micro syringe with a 2 inch x 0.006 inch ID, 22° bevel needle (Hamilton #702N or equivalent).

4.3.4 Micro syringes - 10-, 100-µL.

4.3.5 Syringes - 0.5-, 1.0-, and 5-mL, gas-tight with shut-off valve.

4.4 Miscellaneous

4.4.1 Glass vials

4.4.1.1 60-mL, septum-sealed, to collect samples for screening, dry weight determination.

4.4.1.2 40-mL, screw-cap, PTFE lined, septum-sealed. Examine each vial prior to use to ensure that the vial has a flat, uniform sealing surface.

4.4.2 Top-loading balance - Capable of accurately weighing to 0.01 g.

4.4.3 Glass scintillation vials - 20-mL, with screw-caps and PTFE liners, or glass culture tubes with screw-caps and PTFE liners, for dilution of oily waste samples.

4.4.4 Volumetric flasks - Class A, 10-mL and 100-mL, with ground-glass stoppers.

4.4.5 2-mL glass vials, for GC autosampler - Used for oily waste samples extracted with methanol or PEG.

4.4.6 Spatula, stainless steel - narrow enough to fit into a sample vial.

4.4.7 Disposable Pasteur pipettes.

4.4.8 Magnetic stirring bars - PTFE- or glass-coated, of the appropriate size to fit the sample vials. Consult manufacturer's recommendation for specific stirring bars. Stirring bars may be reused, provided that they are thoroughly cleaned between uses. Consult the manufacturers of the purging device and the stirring bars for suggested cleaning procedures.

4.5 Field Sampling Equipment

4.5.1 Purge-and-Trap Soil Sampler - Model 3780PT (Associated Design and Manufacturing Company, 814 North Henry Street, Alexandria, VA 22314), or equivalent.

4.5.2 EnCore™ sampler - (En Chem, Inc., 1795 Industrial Drive, Green Bay, WI 54302), or equivalent.

4.5.3 Alternatively, disposable plastic syringes with a barrel smaller than the neck of the soil vial may be used to collect the sample. The syringe end of the barrel is cut off prior to sampling. One syringe is needed for each sample aliquot to be collected.

4.5.4 Portable balance - For field use, capable of weighing to 0.01 g.

4.5.5 Balance weights - Balances employed in the field should be checked against an appropriate reference weight at least once daily, prior to weighing any samples, or as described in the sampling plan. The specific weights used will depend on the total weight of the sample container, sample, stirring bar, reagent water added, cap, and septum.

5.0 REAGENTS

5.1 Organic-free reagent water - All references to water in this method refer to organic-free reagent water, as defined in Chapter One.

5.2 Methanol, CH_3OH - purge-and-trap quality or equivalent. Store away from other solvents.

5.3 Polyethylene glycol (PEG), $H(OCH_2CH_2)_nOH$ - free of interferences at the detection limit of the target analytes.

5.4 Low concentration sample preservative

5.4.1 Sodium bisulfate, $NaHSO_4$ - ACS reagent grade or equivalent.

5.4.2 The preservative should be added to the vial prior to shipment to the field, and must be present in the vial prior to adding the sample.

5.5 See the determinative method and Method 5000 for guidance on internal standards and surrogates to be employed in this procedure.

6.0 SAMPLE COLLECTION, PRESERVATION, AND HANDLING

Refer to the introductory material in this chapter, Organic Analytes, Sec. 4.1, for general sample collection information. The low concentration portion of this method employs sample vials that are filled and weighed in the field and never opened during the analytical process. As a result, sampling personnel should be equipped with a portable balance capable of weighing to 0.01 g.

6.1 Preparation of sample vials

The specific preparation procedures for sample vials depend on the expected concentration range of the sample, with separate preparation procedures for low concentration soil samples and high concentration soil and solid waste samples. Sample vials should be prepared in a fixed laboratory or other controlled environment, sealed, and shipped to the field location. Gloves should be worn during the preparation steps.

6.1.1 Low concentration soil samples

The following steps apply to the preparation of vials used in the collection of low concentration soil samples to be analyzed by the closed-system purge-and-trap equipment described in Method 5035.

6.1.1.1 Add a clean magnetic stirring bar to each clean vial. If the purge-and-trap device (Sec. 4.2) employs a means of stirring the sample other than a magnetic stirrer (e.g., sonication or other mechanical means), then the stir bar is omitted.

6.1.1.2 Add preservative to each vial. The preservative is added to each vial prior to shipping the vial to the field. Add approximately 1 g of sodium bisulfate to each vial. If samples markedly smaller or larger than 5 g are to be collected, adjust the amount of preservative added to correspond to approximately 0.2 g of preservative for each 1 g of sample. Enough sodium bisulfate should be present to ensure a sample pH of $\leq$2.

6.1.1.3 Add 5 mL of organic-free reagent water to each vial. The water and the preservative will form an acid solution that will reduce or eliminate the majority of the biological activity in the sample, thereby preventing biodegradation of the volatile target analytes.

6.1.1.4 Seal the vial with the screw-cap and septum seal. If the double-ended, fritted, vials are used, seal both ends as recommended by the manufacturer.

6.1.1.5 Affix a label to each vial. This eliminates the need to label the vials in the field and assures that the tare weight of the vial includes the label. (The weight of any markings added to the label in the field is negligible).

6.1.1.6 Weigh the prepared vial to the nearest 0.01 g, record the tare weight, and write it on the label.

6.1.1.7 Because volatile organics will partition into the headspace of the vial from the aqueous solution and will be lost when the vial is opened, surrogates, matrix spikes, and internal standards (if applicable) should only be added to the vials after the sample has been added to the vial. These standards should be introduced back in the

laboratory, either manually by puncturing the septum with a small-gauge needle or automatically by the sample introduction system, just prior to analysis.

6.1.2 High concentration soil samples collected without a preservative

When high concentration samples are collected without a preservative, a variety of sample containers may be employed, including 60-mL glass vials with septum seals (see Sec. 4.4).

6.1.3 High concentration soil samples collected and preserved in the field

The following steps apply to the preparation of vials used in the collection of high concentration soil samples to be preserved in the field with methanol and analyzed by the aqueous purge-and-trap equipment described in Method 5030.

6.1.3.1 Add 10 mL of methanol to each vial.

6.1.3.2 Seal the vial with the screw-cap and septum seal.

6.1.3.3 Affix a label to each vial. This eliminates the need to label the vials in the field and assures that the tare weight of the vial includes the label. (The weight of any markings added to the label in the field is negligible).

6.1.3.4 Weigh the prepared vial to the nearest 0.01 g, record the tare weight, and write it on the label.

NOTE: Vials containing methanol should be weighed a second time on the day that they are to be used. Vials found to have lost methanol (reduction in weight of >0.01 g) should not be used for sample collection.

6.1.3.5 Surrogates, internal standards and matrix spikes (if applicable) should be added to the sample after it is returned to the laboratory and prior to analysis.

6.1.4 Oily waste samples

When oily waste samples are known to be soluble in methanol or PEG, sample vials may be prepared as described in Sec. 6.1.3, using the appropriate solvent. However, when the solubility of the waste is unknown, the sample should be collected without the use of a preservative, in a vial such as that described in Sec. 6.1.2.

6.2 Sample collection

Collect the sample according to the procedures outlined in the sampling plan. As with any sampling procedure for volatiles, care must be taken to minimize the disturbance of the sample in order to minimize the loss of the volatile components. Several techniques may be used to transfer a sample to the relatively narrow opening of the low concentration soil vial. These include devices such as the EnCore™ sampler, the Purge-and-Trap Soil Sampler ™, and a cut plastic syringe. Always wear gloves whenever handling the tared sample vials.

6.2.1 Low concentration soil samples

6.2.1.1 Using an appropriate sample collection device, collect approximately 5 g of sample as soon as possible after the surface of the soil or other solid material has been exposed to the atmosphere: generally within a few minutes at most. Carefully wipe the exterior of the sample collection device with a clean cloth or towel.

6.2.1.2 Using the sample collection device, add about 5 g (2 - 3 cm) of soil to the sample vial containing the preservative solution. Quickly brush any soil off the vial threads and immediately seal the vial with the septum and screw-cap. Store samples on ice at 4°C.

NOTE: Soil samples that contain carbonate minerals (either from natural sources or applied as an amendment) may effervesce upon contact with the acidic preservative solution in the low concentration sample vial. If the amount of gas generated is very small (i.e., several mL), any loss of volatiles as a result of such effervescence may be minimal if the vial is sealed quickly. However, if larger amounts of gas are generated, not only may the sample lose a significant amount of analyte, but the gas pressure may shatter the vial if the sample vial is sealed. Therefore, when samples are known or suspected to contain high levels of carbonates, a test sample should be collected, added to a vial, and checked for effervescence. If a rapid or vigorous reaction occurs, discard the sample and collect low concentration samples in vials that do not contain the preservative solution.

6.2.1.3 When practical, use a portable balance to weigh the sealed vial containing the sample to ensure that 5.0 ± 0.5 g of sample were added. The balance should be calibrated in the field using an appropriate weight for the sample containers employed (Sec. 4.5.5). Record the weight of the sealed vial containing the sample to the nearest 0.01 g.

6.2.1.4 Alternatively, collect several trial samples with plastic syringes. Weigh each trial sample and note the length of the soil column in the syringe. Use these data to determine the length of soil in the syringe that corresponds to 5.0 ± 0.5 g. Discard each trial sample.

6.2.1.5 As with the collection of aqueous samples for volatiles, collect at least two replicate samples. This will allow the laboratory an additional sample for reanalysis. The second sample should be taken from the same soil stratum or the same section of the solid waste being sampled, and within close proximity to the location from which the original sample was collected.

6.2.1.6 In addition, since the soil vial cannot be opened without compromising the integrity of the sample, at least one additional aliquot of sample must be collected for screening, dry weight determination, and high concentration analysis (if necessary). This third aliquot may be collected in a 60-mL glass vial or a third 40-mL soil sample vial. However, this third vial must *not* contain the sample preservative solution, as an aliquot will be used to determine dry weight. If high concentration samples are collected in vials containing methanol, then two additional aliquots should be collected, one for high concentration analysis collected in a vial containing methanol, and another for the dry weight determination in a vial without either methanol or the low concentration aqueous preservative solution.

6.2.1.7 If samples are known or expected to contain target analytes over a wide range of concentrations, thereby requiring the analyses of multiple sample aliquots, it may be advisable and practical to take an additional sample aliquot in a low concentration soil vial containing the preservative, but collecting only 1-2 g instead of the 5 g collected in Sec. 6.2.1.1. This aliquot may be used for those analytes that exceed the instrument calibration range in the 5-g analysis.

6.2.1.8 The EnCore™ sampler has not been thoroughly evaluated by EPA as a sample storage device. While preliminary results indicate that storage in the EnCore™ device may be appropriate for up to 48 hours, samples collected in this device should be transferred to the soil sample vials as soon as possible, or analyzed within 48 hours.

6.2.1.9 The collection of low concentration soil samples in vials that contain methanol is not appropriate for samples analyzed with the closed-system purge-and-trap equipment described in this method (see Sec. 6.2.2).

6.2.2 High concentration soil samples preserved in the field

The collection of soil samples in vials that contain methanol has been suggested by some as a combined preservation and extraction procedure. However, this procedure is not appropriate for use with the low concentration soil procedure described in this method.

NOTE: The use of methanol preservation has not been formally evaluated by EPA and analysts must be aware of two potential problems. First, the use of methanol as a preservative and extraction solvent introduces a significant dilution factor that will raise the method quantitation limit beyond the operating range of the low concentration direct purge-and-trap procedure (0.5-200 µg/kg). The exact dilution factor will depend on the masses of solvent and sample, but generally exceeds 1000, and may make it difficult to demonstrate compliance with regulatory limits or action levels for some analytes. Because the analytes of interest are volatile, the methanol extract cannot be concentrated to overcome the dilution problem. Thus, for samples of unknown composition, it may still be necessary to collect an aliquot for analysis by this closed-system procedure and another aliquot preserved in methanol and analyzed by other procedures. The second problem is that the addition of methanol to the sample is likely to cause the sample to fail the ignitability characteristic, thereby making the unused sample volume a hazardous waste.

6.2.2.1 When samples are known to contain volatiles at concentrations high enough that the dilution factor will not preclude obtaining results within the calibration range of the appropriate determinative method, a sample may be collected and immediately placed in a sample vial containing purge-and-trap grade methanol.

6.2.2.2 Using an appropriate sample collection device, collect approximately 5 g of sample as soon as possible after the surface of the soil or other solid material has been exposed to the atmosphere: generally within a few minutes at most. Carefully wipe the exterior of the sample collection device with a clean cloth or towel.

6.2.2.3 Using the sample collection device, add about 5 g (2 - 3 cm) of soil to the vial containing 10 mL of methanol. Quickly brush any soil off the vial threads and immediately seal the vial with the septum and screw-cap. Store samples on ice at 4°C.

6.2.2.4 When practical, use a portable balance to weigh the sealed vial containing the sample to ensure that 5.0 ± 0.5 g of sample were added. The balance should be calibrated in the field using an appropriate weight for the sample containers employed (Sec. 4.5.5). Record the weight of the sealed vial containing the sample to the nearest 0.01 g.

6.2.2.5 Alternatively, collect several trial samples with plastic syringes. Weigh each trial sample and note the length of the soil column in the syringe. Use these data to determine the length of soil in the syringe that corresponds to 5.0 ± 0.5 g. Discard each trial sample.

6.2.2.6 Other sample weights and volumes of methanol may be employed, provided that the analyst can demonstrate that the sensitivity of the overall analytical procedure is appropriate for the intended application.

6.2.2.7 The collection of at least one additional sample aliquot is required for the determination of the dry weight, as described in Sec. 6.2.1.6. Samples collected in methanol should be shipped as described in Sec. 6.3, and must be clearly labeled as containing methanol, so that the samples are not analyzed using the closed-system purge-and-trap equipment described in this procedure.

6.2.3 High concentration soil sample <u>not</u> preserved in the field

The collection of high concentration soil samples that are not preserved in the field generally follows similar procedures as for the other types of samples described in Secs. 6.2.1 and 6.2.2, with the obvious exception that the sample vials contain neither the aqueous preservative solution nor methanol. However, when field preservation is not employed, it is better to collect a larger volume sample, filling the sample container as full as practical in order to minimize the headspace. Such collection procedures generally do not require the collection of a separate aliquot for dry weight determination, but it may be advisable to collect a second sample aliquot for screening purposes, in order to minimize the loss of volatiles in either aliquot.

6.2.4 Oily waste samples

The collection procedures for oily samples depend on knowledge of the waste and its solubility in methanol or other solvents.

6.2.4.1 When an oily waste is <u>known</u> to be soluble in methanol or PEG, the sample may be collected in a vial containing such a solvent (see Sec. 6.1.4), using procedures similar to those described in Sec. 6.2.2.

6.2.4.2 When the solubility of the oily waste is <u>not</u> known, the sample should either be collected in a vial without a preservative, as described in Sec. 6.2.3, or the solubility of a trial sample should be tested in the field, using a vial containing solvent. If the trial sample is soluble in the solvent, then collect the oily waste sample as described in Sec. 6.2.2. Otherwise, collect an unpreserved sample as described in Sec. 6.2.3.

6.3 Sample handling and shipment

All samples for volatiles analysis should be cooled to approximately 4°C, packed in appropriate containers, and shipped to the laboratory on ice, as described in the sampling plan.

6.4 Sample storage

6.4.1 Once in the laboratory, store samples at 4°C until analysis. The sample storage area should be free of organic solvent vapors.

6.4.2 All samples should be analyzed as soon as practical, and within the designated holding time from collection. Samples not analyzed within the designated holding time must be noted and the data are considered minimum values.

6.4.3 When the low concentration samples are strongly alkaline or highly calcareous in nature, the sodium bisulfate preservative solution may not be strong enough to reduce the pH of the soil/water solution to below 2. Therefore, when low concentration soils to be sampled are known or suspected to be strongly alkaline or highly calcareous, additional steps may be required to preserve the samples. Such steps include: addition of larger amounts of the sodium bisulfate preservative to non-calcareous samples, storage of low concentration samples at -10°C (taking care not to fill the vials so full that the expansion of the water in the vial breaks the vial), or significantly reducing the maximum holding time for low concentration soil samples. Whichever steps are employed, they should be clearly described in the sampling and QA project plans and distributed to both the field and laboratory personnel. See Sec. 6.2.1.2 for additional information.

7.0 PROCEDURE

This section describes procedures for sample screening, the low concentration soil method, the high concentration soil method, and the procedure for oily waste samples. High concentration samples are to be introduced into the GC system using Method 5030. Oily waste samples are to be introduced into the GC system using Method 5030 if they are soluble in a water-miscible solvent, or using Method 3585 if they are not.

7.1 Sample screening

7.1.1 It is highly recommended that all samples be screened prior to the purge-and-trap GC or GC/MS analysis. Samples may contain higher than expected quantities of purgeable organics that will contaminate the purge-and-trap system**,** thereby requiring extensive cleanup and instrument maintenance. The screening data are used to determine which is the appropriate sample preparation procedure for the particular sample, the low concentration closed-system direct purge-and-trap method (Sec. 7.2), the high concentration (methanol extraction) method (Sec. 7.3), or the nonaqueous liquid (oily waste) methanol or PEG dilution procedure (Sec. 7.4).

7.1.2 The analyst may employ any appropriate screening technique. Two suggested screening techniques employing SW-846 methods are:

7.1.2.1 Automated headspace (Method 5021) using a gas chromatograph (GC) equipped with a photoionization detector (PID) and an electrolytic conductivity detector (HECD) in series, or,

7.1.2.2 Extraction of the sample with hexadecane (Method 3820) and analysis of the extract on a GC equipped with a FID and/or an ECD.

7.1.3 The analyst may inject a calibration standard containing the analytes of interest at a concentration equivalent to the upper limit of the calibration range of the low concentration soil method. The results from this standard may be used to determine when the screening results approach the upper limit of the low concentration soil method. There are no linearity or other performance criteria associated with the injection of such a standard, and other approaches may be employed to estimate sample concentrations.

7.1.4 Use the low concentration closed-system purge-and-trap method (Sec. 7.2) if the estimated concentration from the screening procedure falls within the calibration range of the selected determinative method. If the concentration exceeds the calibration range of the low concentration soil method, then use either the high concentration soil method (Sec. 7.3), or the oily waste method (Sec. 7.4).

7.2 Low concentration soil method (Approximate concentration range of 0.5 to 200 µg/kg - the concentration range is dependent upon the determinative method and the sensitivity of each analyte.)

7.2.1 Initial calibration

Prior to using this introduction technique for any GC or GC/MS method, the system must be calibrated. General calibration procedures are discussed in Method 8000, while the determinative methods and Method 5000 provide specific information on calibration and preparation of standards. Normally, external standard calibration is preferred for the GC methods (non-MS detection) because of possible interference problems with internal standards. If interferences are not a problem, or when a GC/MS method is used, internal standard calibration may be employed.

7.2.1.1 Assemble a purge-and-trap device that meets the specification in Sec. 4.2 and that is connected to a gas chromatograph or a gas chromatograph/mass spectrometer system.

7.2.1.2 Before initial use, a Carbopack/Carbosieve trap should be conditioned overnight at 245°C by backflushing with an inert gas flow of at least 20 mL/minute. If other trapping materials are substituted for the Carbopack/Carbosieve, follow the manufacturers recommendations for conditioning. Vent the trap effluent to the hood, not to the analytical column. Prior to daily use, the trap should be conditioned for 10 minutes at 245°C with backflushing. The trap may be vented to the analytical column during daily conditioning; however, the column must be run through the temperature program prior to analysis of samples.

7.2.1.3 If the standard trap in Sec. 4.2.2.2 is employed, prior to initial use, the trap should be conditioned overnight at 180°C by backflushing with an inert gas flow of at least 20 mL/min, or according to the manufacturer's recommendations. Vent the trap effluent to the hood, not to the analytical column. Prior to daily use, the trap should be conditioned for 10 min at 180°C with backflushing. The trap may be vented to the analytical column during daily conditioning; however, the column must be run through the temperature program prior to analysis of samples.

7.2.1.4 Establish the purge-and-trap instrument operating conditions. Adjust the instrument to inject 5 mL of water, to heat the sample to 40°C, and to hold the sample at 40°C for 1.5 minutes before commencing the purge process, or as recommended by the instrument manufacturer.

7.2.1.5 Prepare a minimum of five initial calibration standards containing all the analytes of interest and surrogates, as described in Method 8000, and following the instrument manufacturer's instructions. The calibration standards are prepared in organic-free reagent water. The volume of organic-free reagent water used for calibration must be the same volume used for sample analysis (normally 5 mL added to the vial before shipping it to the field plus the organic-free reagent water added by the instrument). The calibration standards should also contain approximately the same amount of the sodium bisulfate preservative as the sample (e.g., ~1 g), as the presence of the preservative will affect the purging efficiencies of the analytes. The internal standard solution must be added automatically, by the instrument, in the same fashion as used for the samples. Place the soil vial containing the solution in the instrument carousel. In order to calibrate the surrogates using standards at five concentrations, it may be necessary to disable the automatic addition of surrogates to each vial containing a calibration standard (consult the manufacturer's instructions). Prior to purging, heat the sample vial to 40°C for 1.5 minutes, or as recommended by the manufacturer.

7.2.1.6 Carry out the purge-and-trap procedure as outlined in Secs. 7.2.3. to 7.2.5.

7.2.1.7 Calculate calibration factors (CF) or response factors (RF) for each analyte of interest using the procedures described in Method 8000. Calculate the average CF (external standards) or RF (internal standards) for each compound, as described in Method 8000. Evaluate the linearity of the calibration data, or choose another calibration model, as described in Method 8000 and the specific determinative method.

7.2.1.8 For GC/MS analysis, a system performance check must be made before this calibration curve is used (see Method 8260). If the purge-and-trap procedure is used with Method 8021, evaluate the response for the following four compounds: chloromethane; 1,1-dichloroethane; bromoform; and 1,1,2,2-tetrachloroethane. They are used to check for proper purge flow and to check for degradation caused by contaminated lines or active sites in the system.

7.2.1.8.1 Chloromethane is the most likely compound to be lost if the purge flow is too fast.

7.2.1.8.2 Bromoform is one of the compounds most likely to be purged very poorly if the purge flow is too slow. Cold spots and/or active sites in the transfer lines may adversely affect response.

7.2.1.8.3 Tetrachloroethane and 1,1-dichloroethane are degraded by contaminated transfer lines in purge-and-trap systems and/or active sites in trapping materials.

7.2.1.9 When analyzing for very late eluting compounds with Method 8021 (i.e., hexachlorobutadiene, 1,2,3-trichlorobenzene, etc.), cross-contamination and memory effects from a high concentration sample or even the standard are a common problem.

Extra rinsing of the purge chamber after analysis normally corrects this. The newer purge-and-trap systems often overcome this problem with better bakeout of the system following the purge-and-trap process. Also, the charcoal traps retain less moisture and decrease the problem.

7.2.2 Calibration verification

Refer to Method 8000 for details on calibration verification. A single standard near the mid-point of calibration range is used for verification. This standard should also contain approximately 1 g of sodium bisulfate.

7.2.3 Sample purge-and-trap

This method is designed for a 5-g sample size, but smaller sample sizes may be used. Consult the instrument manufacturer's instructions regarding larger sample sizes, in order to avoid clogging of the purging apparatus. The soil vial is hermetically sealed at the sampling site, and MUST remain so in order to guarantee the integrity of the sample. Gloves must be worn when handling the sample vial since the vial has been tared. If any soil is noted on the exterior of the vial or cap, it must be carefully removed prior to weighing. Weigh the vial and contents to the nearest 0.01 g, even if the sample weight was determined in the field, and record this weight. This second weighing provides a check on the field sampling procedures and provides additional assurance that the reported sample weight is accurate. Data users should be advised on significant discrepancies between the field and laboratory weights.

7.2.3.1 Remove the sample vial from storage and allow it to warm to room temperature. Shake the vial gently, to ensure that the contents move freely and that stirring will be effective. Place the sample vial in the instrument carousel according to the manufacturer's instructions.

7.2.3.2 Without disturbing the hermetic seal on the sample vial, add 5 mL of organic-free reagent water, the internal standards, and the surrogate compounds. This is carried out using the automated sampler. Other volumes of organic-free reagent water may be used, however, it is imperative that all samples, blanks, and calibration standards have exactly the same final volume of organic-free reagent water. Prior to purging, heat the sample vial to 40°C for 1.5 minutes, or as described by the manufacturer.

7.2.3.3 For the sample selected for matrix spiking, add the matrix spiking solution described in Sec. 5.0 of Method 5000, either manually, or automatically, following the manufacturer's instructions. The concentration of the spiking solution and the amount added should be established as described in Sec. 8.0 of Method 8000.

7.2.3.4 Purge the sample with helium or another inert gas at a flow rate of up to 40 mL/minute (the flow rate may vary from 20 to 40 mL/min, depending on the target analyte group) for 11 minutes while the sample is being agitated with the magnetic stirring bar or other mechanical means. The purged analytes are allowed to flow out of the vial through a glass-lined transfer line to a trap packed with suitable sorbent materials.

7.2.4 Sample Desorption

7.2.4.1 Non-cryogenic interface - After the 11 minute purge, place the purge-and-trap system in the desorb mode and preheat the trap to 245°C without a flow

of desorption gas. Start the flow of desorption gas at 10 mL/minute for about four minutes (1.5 min is normally adequate for analytes in Method 8015). Begin the temperature program of the gas chromatograph and start data acquisition.

7.2.4.2 Cryogenic interface - After the 11 minute purge, place the purge-and-trap system in the desorb mode, make sure that the cryogenic interface is at -150°C or lower, and rapidly heat the trap to 245°C while backflushing with an inert gas at 4 mL/minute for about 5 minutes (1.5 min is normally adequate for analytes in Methods 8015). At the end of the 5-minute desorption cycle, rapidly heat the cryogenic trap to 250°C. Begin the temperature program of the gas chromatograph and start the data acquisition.

7.2.5 Trap Reconditioning

After desorbing the sample for 4 minutes, recondition the trap by returning the purge-and-trap system to the purge mode. Maintain the trap temperature at 245°C (or other temperature recommended by the manufacturer of the trap packing materials). After approximately 10 minutes, turn off the trap heater and halt the purge flow through the trap. When the trap is cool, the next sample can be analyzed.

7.2.6 Data Interpretation

Perform qualitative and quantitative analysis following the guidance given in the determinative method and Method 8000. If the concentration of any target analyte exceeds the calibration range of the instrument, it will be necessary to reanalyze the sample by the high concentration method. Such reanalyses need only address those analytes for which the concentration exceeded the calibration range of the low concentration method. Alternatively, if a sample aliquot of 1-2 g was also collected (see Sec. 6.2.1.7), it may be practical to analyze that aliquot for the analytes that exceeded the instrument calibration range in the 5-g analysis. If results are to be reported on a dry weight basis, proceed to Sec. 7.5

7.3 High concentration method for soil samples with concentrations generally greater than 200 µg/kg.

The high concentration method for soil is based on a solvent extraction. A solid sample is either extracted or diluted, depending on sample solubility in a water-miscible solvent. An aliquot of the extract is added to organic-free reagent water containing surrogates and, if applicable, internal and matrix spiking standards, purged according to Method 5030, and analyzed by an appropriate determinative method. Wastes that are insoluble in methanol (i.e., petroleum and coke wastes) are diluted with hexadecane (see Sec. 7.3.8).

The specific sample preparation steps depend on whether or not the sample was preserved in the field. Samples that were <u>not</u> preserved in the field are prepared using the steps below, beginning at Sec. 7.3.1. If solvent preservation was employed in the field, then the preparation begins with Sec. 7.3.4.

7.3.1 When the high concentration sample is <u>not</u> preserved in the field, the sample consists of the entire contents of the sample container. Do not discard any supernatant liquids. Whenever practical, mix the contents of the sample container by shaking or other mechanical means without opening the vial. When shaking is not practical, quickly mix the contents of the vial with a narrow metal spatula and immediately reseal the vial.

7.3.2 If the sample is from an unknown source, perform a solubility test before proceeding. Remove several grams of material from the sample container. Quickly reseal the container to minimize the loss of volatiles. Weigh 1-g aliquots of the sample into several test tubes or other suitable containers. Add 10 mL of methanol to the first tube, 10 mL of PEG to the second, and 10 mL of hexadecane to the third. Swirl the sample and determine if it is soluble in the solvent. Once the solubility has been evaluated, discard these test solutions. If the sample is soluble in either methanol or PEG, proceed with Sec. 7.3.3. If the sample is only soluble in hexadecane, proceed with Sec. 7.3.8.

7.3.3 For soil and solid waste samples that are soluble in methanol, add 9.0 mL of methanol and 1.0 mL of the surrogate spiking solution to a tared 20-mL vial. Using a top-loading balance, weigh 5 g (wet weight) of sample into the vial. Quickly cap the vial and reweigh the vial. Record the weight to 0.1 g. Shake the vial for 2 min. If the sample was not soluble in methanol, but was soluble in PEG, employ the same procedure described above, but use 9.0 mL of PEG in place of the methanol. Proceed with Sec. 7.3.5.

NOTE: The steps in Secs. 7.3.1, 7.3.2, and 7.3.3 must be performed rapidly and without interruption to avoid loss of volatile organics. These steps must be performed in a laboratory free from solvent fumes.

7.3.4 For soil and solid waste samples that were collected in methanol or PEG (see Sec. 6.2.2), weigh the vial to 0.1 g as a check on the weight recorded in the field, add the surrogate spiking solution to the vial by injecting it through the septum, shake for 2 min, as described above, and proceed with Sec. 7.3.5.

7.3.5 Pipet approximately 1 mL of the extract from either Sec. 7.3.3 or 7.3.4 into a GC vial for storage, using a disposable pipet, and seal the vial. The remainder of the extract may be discarded. Add approximately 1 mL of methanol or PEG to a separate GC vial for use as the method blank for each set of samples extracted with the same solvent.

7.3.6 The extracts must be stored at 4°C in the dark, prior to analysis. Add an appropriate aliquot of the extract (see Table 2) to 5.0 mL of organic-free reagent water and analyze by Method 5030 in conjunction with the appropriate determinative method. Proceed to Sec. 7.0 in Method 5030 and follow the procedure for purging high concentration samples.

7.3.7 If results are to be reported on a dry weight basis, determine the dry weight of a separate aliquot of the sample, using the procedure in Sec. 7.5, after the sample extract has been transferred to a GC vial and the vial sealed.

7.3.8 For solids that are not soluble in methanol or PEG (including those samples consisting primarily of petroleum or coking waste) dilute or extract the sample with hexadecane using the procedures in Sec. 7.0 of Method 3585.

7.4 High concentration method for oily waste samples

This procedure for the analysis of oily waste samples involves the dilution of the sample in methanol or PEG. However, care must be taken to avoid introducing any of the floating oil layer into the instrument. A portion of the diluted sample is then added to 5.0 mL of organic-free reagent water, purged according to Method 5030, and analyzed using an appropriate determinative method.

For oily samples that are not soluble in methanol or PEG (including those samples consisting primarily of petroleum or coking waste), dilute or extract with hexadecane using the procedures in Sec. 7.0 of Method 3585.

The specific sample preparation steps depend on whether or not the sample was preserved in the field. Samples that were not preserved in the field are prepared using the steps below, beginning at Sec. 7.4.1. If methanol preservation was employed in the field, then the preparation begins with Sec. 7.4.3.

7.4.1 If the waste was not preserved in the field and it is soluble in methanol or PEG, weigh 1 g (wet weight) of the sample into a tared 10-mL volumetric flask, a tared scintillation vial, or a tared culture tube. If a vial or tube is used instead of a volumetric flask, it must be calibrated prior to use. This operation must be performed prior to opening the sample vial and weighing out the aliquot for analysis.

7.4.1.1 To calibrate the vessel, pipet 10.0 mL of methanol or PEG into the vial or tube and mark the bottom of the meniscus.

7.4.1.2 Discard this solvent, and proceed with weighing out the 1-g sample aliquot.

7.4.2 Quickly add 1.0 mL of surrogate spiking solution to the flask, vial, or tube, and dilute to 10.0 mL with the appropriate solvent (methanol or PEG). Swirl the vial to mix the contents and then shake vigorously for 2 minutes.

7.4.3 If the sample was collected in the field in a vial containing methanol or PEG, weigh the vial to 0.1 g as a check on the weight recorded in the field, add the surrogate spiking solution to the vial by injecting it through the septum. Swirl the vial to mix the contents and then shake vigorously for 2 minutes and proceed with Sec. 7.4.4.

7.4.4 Regardless of how the sample was collected, the target analytes are extracted into the solvent along with the majority of the oily waste (i.e., some of the oil may still be floating on the surface). If oil is floating on the surface, transfer 1 to 2 mL of the extract to a clean GC vial using a Pasteur pipet. Ensure that no oil is transferred to the vial.

7.4.5 Add 10 - 50 µL of the methanol extract to 5 mL of organic-free reagent water for purge-and-trap analysis, using Method 5030.

7.4.6 Prepare a matrix spike sample by adding 10 - 50 µL of the matrix spike standard dissolved in methanol to a 1-g aliquot of the oily waste. Shake the vial to disperse the matrix spike solution throughout the oil. Then add 10 mL of extraction solvent and proceed with the extraction and analysis, as described in Secs. 7.4.2 - 7.4.5. Calculate the recovery of the spiked analytes as described in Method 8000. If the recovery is not within the acceptance limits for the application, use the hexadecane dilution technique in Sec. 7.0 of Method 3585.

7.5 Determination of % Dry Weight

If results are to be reported on a dry weight basis, it is necessary to determine the dry weight of the sample.

NOTE: It is highly recommended that the dry weight determination only be made after the analyst has determined that no sample aliquots will be taken from the 60-mL vial for high

concentration analysis. This is to minimize loss of volatiles and to avoid sample contamination from the laboratory atmosphere. There is no holding time associated with the dry weight determination. Thus, this determination can be made any time prior to reporting the sample results, as long as the vial containing the additional sample has remained sealed and properly stored.

7.5.1 Weigh 5-10 g of the sample from the 60-mL VOA vial into a tared crucible.

7.5.2 Dry this aliquot overnight at 105°C. Allow to cool in a desiccator before weighing. Calculate the % dry weight as follows:

$$\%\ \text{dry weight} = \frac{\text{g of dry sample}}{\text{g of sample}} \times 100$$

WARNING: The drying oven should be contained in a hood or vented. Significant laboratory contamination may result from a heavily contaminated hazardous waste sample.

8.0 QUALITY CONTROL

8.1 Refer to Chapter One for specific quality control procedures and Method 5000 for sample preparation QC procedures.

8.2 Before processing any samples, the analyst should demonstrate through the analysis of an organic-free reagent water method blank that all glassware and reagents are interference free. Each time a set of samples is extracted, or there is a change in reagents, a method blank should be processed as a safeguard against chronic laboratory contamination. The blank samples should be carried through all stages of the sample preparation and measurement.

8.3 Initial Demonstration of Proficiency - Each laboratory must demonstrate initial proficiency with each sample preparation and determinative method combination it utilizes, by generating data of acceptable accuracy and precision for target analytes in a clean matrix. The laboratory must also repeat this demonstration whenever new staff are trained or significant changes in instrumentation are made. See Sec. 8.0 of Methods 5000 and 8000 for information on how to accomplish this demonstration.

8.4 Sample Quality Control for Preparation and Analysis - See Sec. 8.0 in Method 5000 and Method 8000 for procedures to follow to demonstrate acceptable continuing performance on each set of samples to be analyzed. These include the method blank, either a matrix spike/matrix spike duplicate or a matrix spike and duplicate sample analysis, a laboratory control sample (LCS), and the addition of surrogates to each sample and QC sample.

8.5 It is recommended that the laboratory adopt additional quality assurance practices for use with this method. The specific practices that are most productive depend upon the needs of the laboratory and the nature of the samples. Whenever possible, the laboratory should analyze standard reference materials and participate in relevant performance evaluation studies.

9.0 METHOD PERFORMANCE

9.1 Single laboratory accuracy and precision data were obtained for the method analytes in three soil matrices, sand, a soil collected 10 feet below the surface of a hazardous landfill, called the

C-Horizon, and a surface garden soil. Each sample was fortified with the analytes at a concentration of 20 ng/5 g, which is equivalent to 4 µg/kg. These data are listed in tables found in Method 8260.

9.2 Single laboratory accuracy and precision data were obtained for certain method analytes when extracting oily liquid using methanol as the extraction solvent. The data are presented in a table in Method 8260. The compounds were spiked into three portions of an oily liquid (taken from a waste site) following the procedure for matrix spiking described in Sec. 7.4. This represents a worst case set of data based on recovery data from many sources of oily liquid.

10.0 REFERENCES

1. Bellar, T., "Measurement of Volatile Organic Compounds in Soils Using Modified Purge-and-Trap and Capillary Gas Chromatography/Mass Spectrometry" U.S. Environmental Protection Agency, Environmental Monitoring Systems Laboratory, Cincinnati, OH, November 1991.

2. Siegrist, R. L., Jenssen, P. D., “Evaluation of Sampling Method Effects on Volatile Organic Compound Measurements in Contaminated Soils”, Envir Sci Technol, 1990; 24; 1387-92.

3. Hewitt, A. D., Jenkins, T. F., Grant, C. L., “Collection, Handling and Storage: Keys to Improved Data Quality for Volatile Organic Compounds in Soil”, Am Environ Lab, 1995; 7(1); 25-8.

4. Liikala, T. L., Olsen, K. B., Teel, S. S., Lanigan, D. C., “Volatile Organic Compounds: Comparison of Two Sample Collection and Preservation Methods”, Envir Sci Technol, 1996; 30; 3441-7.

5. Lewis, T. E., Crockett, A. B., Siegrist, R. L., Zarrabi, K., “Soil Sampling and Analysis for Volatile Organic Compounds”, Envir Monitoring & Assessment, 1994; 30; 213-46.

6. Hewitt, A. D., “Enhanced Preservation of Volatile Organic Compounds in Soil with Sodium Bisulfate”, SR95-26, U. S. Army Cold Regions Research and Engineering Laboratory, Hanover, NH.

7. Hewitt, A. D., Lukash, N. J. E., “Sampling for In-Vial Analysis of Volatile Organic Compounds in Soil”, Am Environ Lab, 1996; Aug; 15-9.

8. Hewitt, A. D., Miyares, P. H., Sletten, R. S., “Determination of Two Chlorinated Volatile Organic Compounds in Soil by Headspace Gas Chromatography and Purge-and-Trap Gas Chromatography/Mass Spectrometry”, Hydrocarbon Contaminated Soils, 1993, 3; 135-45, Chelsea, MI, Lewis Publishers.

9. Hewitt, A. D., “Methods of Preparing Soil Samples for Headspace Analysis of Volatile Organic Compounds: Emphasis on Salting Out”, 12th Annual Waste Testing and Quality Assurance Symposium, Washington, DC, 1996, 322-9.

10. Hewitt, A. D., Miyares, P. H., Leggett, D. C., Jenkins, T. F., “Comparison of Analytical Methods for Determination of Volatile Organic Compounds”, Envir Sci Tech, 1992; 26; 1932-8.

TABLE 1

QUANTITY OF METHANOL EXTRACT REQUIRED FOR ANALYSIS OF HIGH CONCENTRATION SOILS/SEDIMENTS

Approximate Concentration Range	Volume of Methanol Extract[a]
500 - 10,000 µg/kg	100 µL
1,000 - 20,000 µg/kg	50 µL
5,000 - 100,000 µg/kg	10 µL
25,000 - 500,000 µg/kg	100 µL of 1/50 dilution[b]

Calculate appropriate dilution factor for concentrations exceeding those in this table.

[a] The volume of methanol added to 5 mL of water being purged should be kept constant. Therefore, add to the 5-mL syringe whatever volume of methanol is necessary to maintain a total volume of 100 µL of methanol.

[b] Dilute an aliquot of the methanol extract and then take 100 µL for analysis.

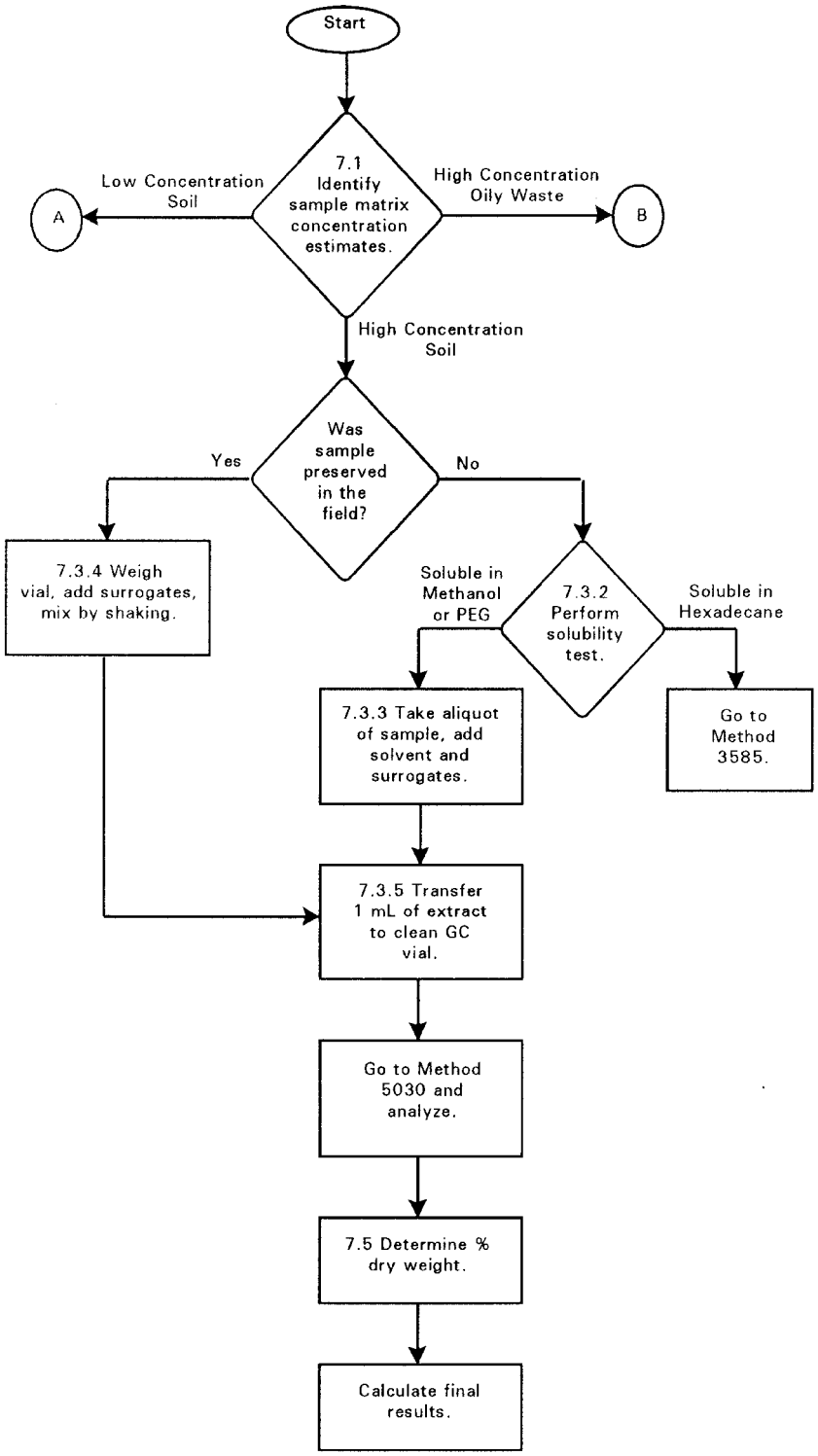
Start
7.1 Identify sample matrix concentration estimates.
Low Concentration Soil
A
High Concentration Oily Waste
B
High Concentration Soil
Was sample preserved in the field?
Yes
No
7.3.4 Weigh vial, add surrogates, mix by shaking.
7.3.2 Perform solubility test.
Soluble in Methanol or PEG
Soluble in Hexadecane
7.3.3 Take aliquot of sample, add solvent and surrogates.
Go to Method 3585.
7.3.5 Transfer 1 mL of extract to clean GC vial.
Go to Method 5030 and analyze.
7.5 Determine % dry weight.
Calculate final results.

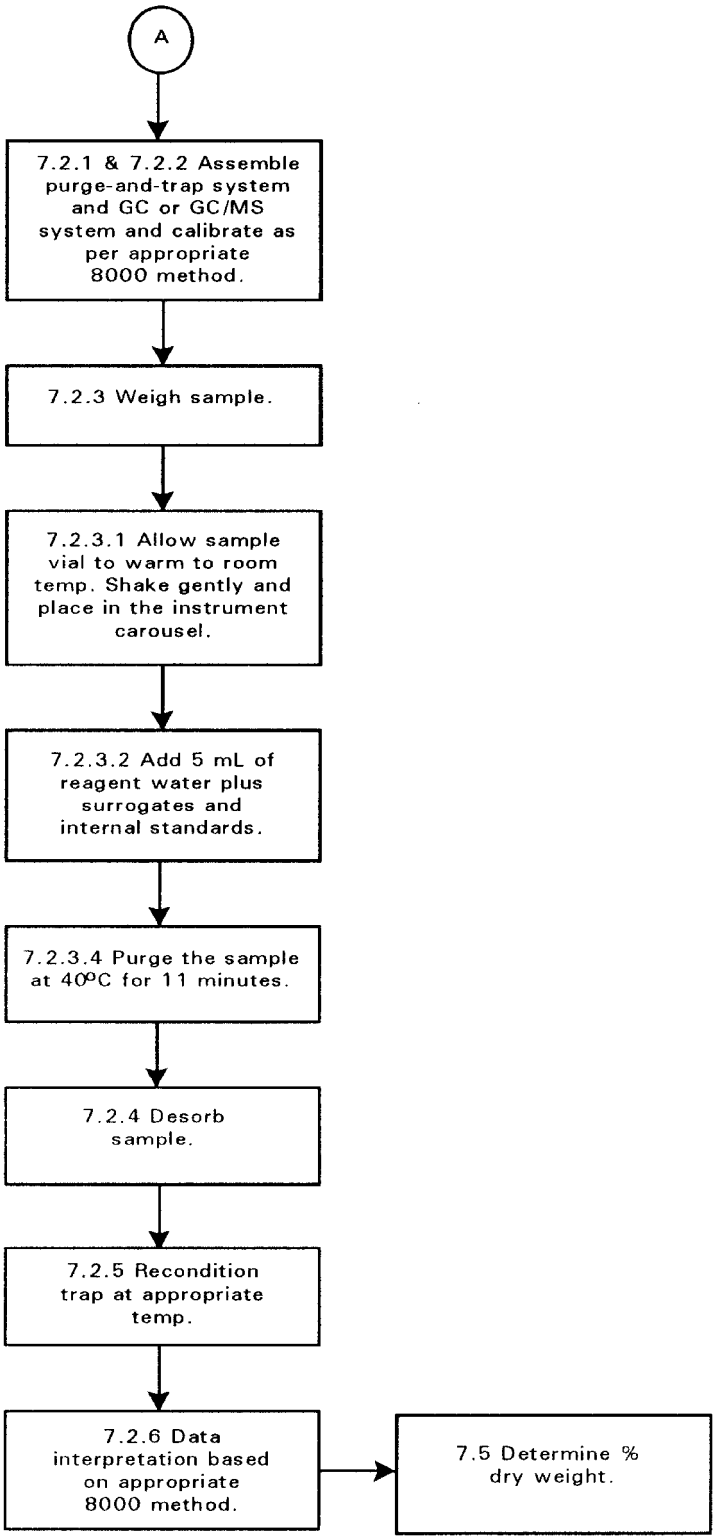
A
7.2.1 & 7.2.2 Assemble purge-and-trap system and GC or GC/MS system and calibrate as per appropriate 8000 method.
7.2.3 Weigh sample.
7.2.3.1 Allow sample vial to warm to room temp. Shake gently and place in the instrument carousel.
7.2.3.2 Add 5 mL of reagent water plus surrogates and internal standards.
7.2.3.4 Purge the sample at 40°C for 11 minutes.
7.2.4 Desorb sample.
7.2.5 Recondition trap at appropriate temp.
7.2.6 Data interpretation based on appropriate 8000 method.
7.5 Determine % dry weight.

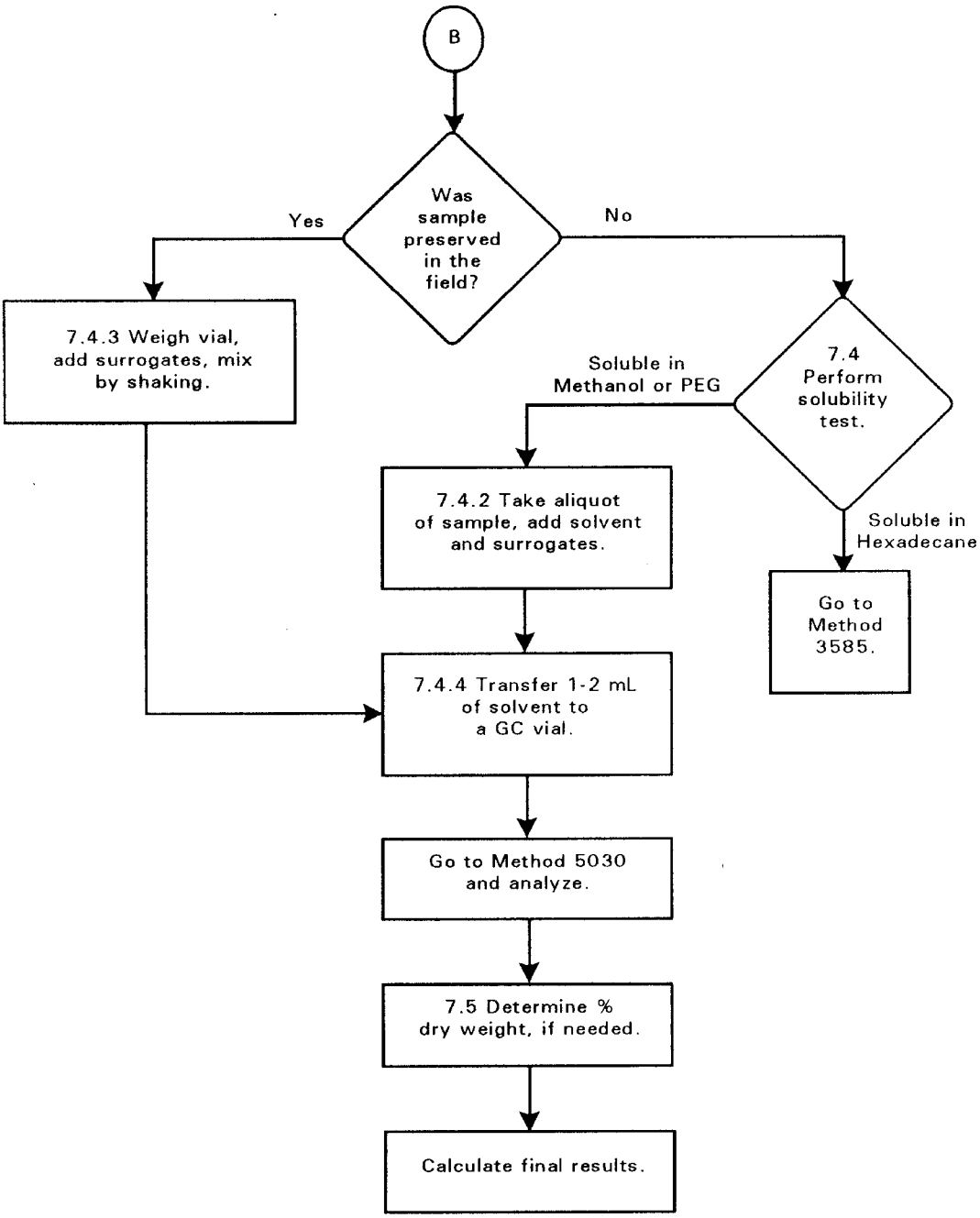
B
Was sample preserved in the field?
Yes
No
7.4.3 Weigh vial, add surrogates, mix by shaking.
7.4 Perform solubility test.
Soluble in Methanol or PEG
Soluble in Hexadecane
7.4.2 Take aliquot of sample, add solvent and surrogates.
Go to Method 3585.
7.4.4 Transfer 1-2 mL of solvent to a GC vial.
Go to Method 5030 and analyze.
7.5 Determine % dry weight, if needed.
Calculate final results.

E.2405
CLEANING – GENERAL

LAST REVISION: November 2001

OBJECTIVE AND APPLICATION

To prepare the equipment for field activities in a manner that minimizes the potential for obtaining biased or erroneous data due to contaminant transfer. Cleaning is performed as a quality assurance measure and a safety precaution. It minimizes cross-contaminants between samples and also helps to maintain a clean working environment. This procedure provides general guidelines and should be used in conjunction with more specific procedures applicable to the cleaning method used.

EQUIPMENT

- As determined by the project manager
- Expendable supplies:
  - Surgical gloves
  - Garbage bags
  - Laboratory glassware detergent such as Alconox or Trisodium Phosphate (TSP)
  - Containers for collection of waste liquids, if necessary
  - Dilute acid, methanol, ethanol or other cleaning fluid
- Source of potable water without chemicals that would interfere or be identified in chemical analysis of samples. The project manager may require laboratory testing of cleaning water as a background for evaluating chemical analyses.

PROCEDURES

Cleaning procedures will vary considerably based on the equipment, type of contaminant, type of sample and detection levels. Initial cleaning should take place at the site prior to demobilizing. This will minimize the spread of contamination. The extent of on-site cleaning will vary based on specific conditions; however, an attempt should be made to decontaminate as thoroughly as possible on site. The more care one applies on keeping the equipment clean, the less energy will be required on cleaning.

All field equipment must be prepared at the laboratory/office prior to use. This will include additional cleaning, inspection, and maintenance.

Equipment such as hand trowels, bailers, mixing bowls, hand augers, etc., should be cleaned and wrapped in aluminum foil (with shiny side out) prior to mobilization.

Sampling and monitoring equipment is normally cleaned by washing and rinsing with liquids such as a soap or detergent solution, potable tap water, deionized water (DI), methanol, or a dilute acid.

The extent and type of contaminant will determine the degree of cleaning. If the level of contamination cannot be readily determined, cleaning should be based on the assumption that the equipment is highly contaminated.

Waste products produced by the cleaning procedures such as waste liquids, solids, gloves, used Chem-wipe® cleaning pads, etc., should be collected and disposed of based on the nature of the contaminant. Specific details for the handling of these wastes should be addressed by the project manager.

E.2410
CLEANING – MANUAL WASHING

LAST REVISION: November 2001

OBJECTIVE AND APPLICATION

To prepare the equipment for field activities in a manner that minimizes the potential for obtaining biased or erroneous data due to contaminant transfer. Cleaning is performed as a quality assurance measure and a safety precaution. It minimizes cross-contaminants between samples and also helps to maintain a clean working environment.

EQUIPMENT

- As determined by the project manager
- Expendable supplies:
  - Surgical gloves
  - Chem-wipe® cleaning pads
  - Garbage bags
  - Laboratory glassware detergent such as Alconox or Trisodium Phosphate (TSP)
  - Containers for collection of waste liquids, if necessary
  - Dilute acid, methanol, ethanol or other cleaning fluid
- Wash rack facility
- Cleaning containers with brushes (plastic, steel or stainless steel buckets)
- Aluminum foil
- Source of potable water without chemicals that would interfere or be identified in chemical analysis of samples. The project manager may require laboratory testing of cleaning water as a background for evaluating chemical analyses.

PROCEDURES

Cleaning procedures will vary considerably based on the equipment, type of contaminant, type of sample and detection levels. Initial cleaning should take place at the site prior to demobilizing. This will minimize the spread of contamination. The extent of on-site cleaning will vary based on

specific conditions; however, an attempt should be made to decontaminate as thoroughly as possible on site. The more care one applies on keeping the equipment clean, the less energy will be required on cleaning.

All field equipment must be prepared at the laboratory/office prior to use. This will include additional cleaning, inspection, and maintenance.

Equipment such as hand trowels, bailers, mixing bowls, hand augers, etc., should be cleaned and wrapped in aluminum foil (with shiny side out) prior to mobilization.

Sampling and monitoring equipment is normally cleaned by washing and rinsing with liquids such as a soap or detergent solution, potable tap water, deionized water (DI), methanol, or a dilute acid.

The extent and type of contaminant will determine the degree of cleaning. If the level of contamination cannot be readily determined, cleaning should be based on the assumption that the equipment is highly contaminated.

Listed below is a cleaning procedure which may be employed for field equipment such as a water level indicator at a monitoring well which contains dissolved petroleum hydrocarbons. If different or more elaborate procedures are required, they should be specified by the project manager during the project initiation meeting.

- Remove gross contamination from the equipment using a Chem-wipe® cleaning pad or brush.
- Wash with a soap or detergent solution
- Rinse with D.I. water
- Rinse with methanol (if method requires) and repeat rinse with D.I. water
- Repeat the entire procedure or any part of the procedure as necessary.

Waste products produced by the cleaning procedures such as waste liquids, solids, gloves, used Chem-wipe® cleaning pads, etc., should be collected and disposed of based on the nature of the contaminant. Specific details for the handling of these wastes should be addressed by the project manager.

E.2420
CLEANING – HIGH-PRESSURE, HOT-WATER WASHING

Objective

To prepare the equipment for field activities in a manner which minimizes the potential for obtaining biased or erroneous data due to contaminant transfer. Decontamination is performed as a quality assurance measure and a safety precaution. It minimizes cross-contaminants between samples and also helps to maintain a clean working environment.

Equipment

- As determined by the project manager
- High pressure hot/cold water washing device or steam cleaner
- Expendable supplies:
- Surgical gloves
- Chem-wipes
- Garbage bags
- Detergent (Alconox or TSP)
- Containers for collections of waste liquids, if necessary D.I. water
- Dilute acid, methanol, ethanol or other cleaning fluid
- Wash rack facility
- Cleaning containers with brushes (plastic, steel or stainless steel buckets)
- Aluminum foil
- Safety monitoring devices as specified in the safety plan.

Procedures

Decontamination procedures will vary considerably based on the equipment, type of contaminant, type of sample and detection levels. Initial decontamination should take place at the site prior to demobilizing. This will minimize the spread of contamination. The extent of on-site decontamination will vary based on specific conditions; however, an attempt should be made to decontaminate as thoroughly as possible on site. The more care one applies on keeping the equipment clean, the less energy will be required on decontamination.

All field equipment must be prepared at the laboratory/office prior to use. This will include additional decontamination, inspection, and maintenance.

Equipment such as hand trowels, bailers, mixing bowls, hand augers, etc., should be cleaned and wrapped in aluminum foil (with shiny side out) prior to mobilization.

Decontamination of larger objects, such as the working end of the drill rig or the downhole tools is accomplished using a high pressure wash.

Sampling and monitoring equipment is normally cleaned by washing and rinsing with liquids such a soap or detergent solutions, tap water, D.I. water, methanol, or a dilute acid.

The extent and type of contaminant will determine the degree of decontamination. If the level of contamination cannot be readily determined, cleaning should be based on the assumption that the equipment is highly contaminated.

Listed below is a decontamination procedure which may be employed for field equipment such as a water level indicator at a monitoring well which contains dissolved petroleum hydrocarbons. If different or more elaborate procedures are required, they should be specified by the project manager during the project initiation meeting.

- Remove gross contamination from the equipment using a chem-wipe or brush.
- Wash with a soap or detergent solution
- Rinse with D.I. water
- Rinse with methanol (if method requires)
- Rinse with D.I. water
- Repeat the entire procedure or any part of the procedure as necessary.

Waste products produced by the decontamination procedures such as waste liquids, solids, gloves, chem-wipes, etc., should be collected and disposed of based on the nature of the contaminant. Specific details for the handling of these wastes should be addressed by the project manager.

E.2220
DISPOSAL OF SPENT SUPPLIES

Last Revision: August 2000

Objective
To provide for proper disposal of sampling equipment, personal protective equipment (PPE), etc. in accordance with applicable regulations.

Equipment

- Equipment specified by project manager.
- Trash bags.
- Disposable gloves.

Procedures
Collect sampling equipment, spent PPE, cleaning fluids, etc. as specified by the Project Manager. This may include segregating the material and sealing in fifty-five (55) gallon drums, placing securely on the site, or disposal to a nearby dumpster (non-hazardous). If material is to be containerized for transportation or storage on-site, clearly mark all containers as to their materials, taking care to use proper signage. Transportation of materials off-site may be by Terracon or a hazardous waste hauler. If a hazardous waste hauler is used, collect all documentation provided (i.e., scale tickets, waste manifests, etc.).

E.2230
HANDLING AND STORAGE OF DRILL CUTTINGS (NON-HAZARDOUS)

Last Revision: August 2000

Objective

To dispose of drill cuttings generated by drilling and well installation activities. This procedure is applicable to sites where the cuttings generated can be reasonably be assumed to be non-hazardous in nature. For handling and storage of drill cuttings that can be reasonably be assumed to be hazardous in nature, reference TSOP E.2235.

Equipment

- Plastic Sheeting.
- Shovel(s).
- Wheelbarrow.
- Disposable gloves.
- Material as specified by Project Manager.

Procedures

Spread the plastic sheeting over the ground in an area designated by the project manager for drill cutting storage. Using the shovel(s) and wheelbarrow, transport the generated cuttings to the stockpile area, if required. Use disposable gloves to reduce the likelihood of sample cross-contamination and/or exposure to site contaminants. Segregate the stockpiles of soil on the plastic sheeting if instructed by the project manager. After stockpiling soil, cover the soil piles with additional plastic sheeting. Use rocks or other available moderately heavy material to prevent the plastic sheeting from blowing off the pile.

As an alternate procedure, the Project Manager may prefer to containerize the auger cuttings in fifty-five (55) gallon drums for transportation off-site or disposal at a later date. Also as an alternate, the Project Manager may specify that auger cuttings be returned to the borehole as much as possible, and then spread over the ground in the area near the boring.

E.1500
BORING ABANDONMENT – COMMERCIAL SEALANT

Last Revision: August 2000

Objective and Application
To permanently close soil borings consistent with industry practice and close the soil boring to prevent its serving as a vertical conduit for movement of environmental impacts through soils. Soil borings of 2-inch diameter or greater are considered borings within the definition of this TSOP.

Equipment
Hand tools appropriate to the job.

Commercially-available sealant materials for well abandonment. Terracon preference for non-slurry fill will be chipped Benseal®, high yield Wyoming bentonite or equivalent.

Procedures
Backfill the soil boring with a mixture of soil cuttings and bentonite or other sealant material. When specified by the project manager, attempt to place soil cuttings back in the borehole in the order that the soil was removed so that soil is returned to the approximate depth from which it originated.

Attached Supporting Documents

- Volume of Soil Boring, Annulus around 2” and 4” Casings, and Grout Mixtures
- Brainard Kilman Field Facts

Other Supporting Documents

- **ASTM D5299-99** *Standard Guide for Decommissioning of Ground Water Wells, Vadose Zone Monitoring Devices, Boreholes, and Other Devices for Environmental Activities*.

VOLUME OF SOIL BORING

CUBIC FEET PER LINEAR FOOT

LENGTH (ft.)	DIAMETER OF SOIL BORING			INSIDE DIAMETER OF HOLLOW STEM AUGER		
				3.25	4.25	6.25
	2	4	6	7.25	8.25	10.25
1	0.028	0.088	0.201	0.29	0.37	0.57
2	0.06	0.18	0.4	0.6	0.7	1.1
3	0.08	0.26	0.6	0.9	1.1	1.7
4	0.11	0.35	0.8	1.2	1.5	2.3
5	0.14	0.44	1.0	1.5	1.9	2.9
6	0.17	0.53	1.2	1.7	2.2	3.4
7	0.20	0.62	1.4	2.0	2.6	4.0
8	0.22	0.70	1.6	2.3	3.0	4.6
9	0.25	0.79	1.8	2.6	3.3	5.1
10	0.28	0.88	2.0	2.9	3.7	5.7
11	0.31	0.97	2.2	3.2	4.1	6.3
12	0.34	1.06	2.4	3.5	4.4	6.8
13	0.36	1.14	2.6	3.8	4.8	7.4
14	0.39	1.23	2.8	4.1	5.2	8.0
15	0.42	1.32	3.0	4.4	5.6	8.6
16	0.45	1.41	3.2	4.6	5.9	9.1
17	0.48	1.50	3.4	4.9	6.3	9.7
18	0.50	1.58	3.6	5.2	6.7	10.3
19	0.53	1.67	3.8	5.5	7.0	10.8
20	0.56	1.76	4.0	5.8	7.4	11.4
22	0.62	1.94	4.4	6.4	8.1	12.5
24	0.67	2.11	4.8	7.0	8.9	13.7
25	0.70	2.20	5.0	7.3	9.3	14.3
26	0.73	2.29	5.2	7.5	9.6	14.8
28	0.78	2.46	5.6	8.1	10.4	16.0
30	0.84	2.64	6.0	8.7	11.1	17.1
32	0.90	2.82	6.4	9.3	11.8	18.2
34	0.95	2.99	6.8	9.9	12.6	19.4
35	0.98	3.08	7.0	10.2	13.0	20.0
36	1.01	3.17	7.2	10.4	13.3	20.5
38	1.06	3.34	7.6	11.0	14.1	21.7
40	1.12	3.52	8.0	11.6	14.8	22.8
45	1.3	4.0	9.0	13.1	16.7	25.7
50	1.4	4.4	10.1	14.5	18.5	28.5
55	1.5	4.8	11.1	16.0	20.4	31.4
60	1.7	5.3	12.1	17.4	22.2	34.2
65	1.8	5.7	13.1	18.9	24.1	37.1
70	2.0	6.2	14.1	20.3	25.9	39.9
75	2.1	6.6	15.1	21.8	27.8	42.8
80	2.2	7.0	16.1	23.2	29.6	45.6
85	2.4	7.5	17.1	24.7	31.5	48.5
90	2.5	7.9	18.1	26.1	33.3	51.3
95	2.7	8.4	19.1	27.6	35.2	54.2
100	2.8	8.8	20.1	29.0	37.0	57.0
125	3.5	11.0	25.1	36.3	46.3	71.3
150	4.2	13.2	30.2	43.5	55.5	85.5
175	4.9	15.4	35.2	50.8	64.8	99.8
200	5.6	17.6	40.2	58.0	74.0	114.0

GALLONS PER LINEAR FOOT

LENGTH (ft.)	DIAMETER OF SOIL BORING			INSIDE DIAMETER OF HOLLOW STEM AUGER		
				3.25	4.25	6.25
	2	4	6	7.25	8.25	10.25
1	0.17	0.66	1.5	2.14	2.78	4.29
2	0.3	1.3	3.0	4.3	5.6	8.6
3	0.5	2.0	4.5	6.4	8.3	12.9
4	0.7	2.6	6.0	8.6	11.1	17.2
5	0.9	3.3	7.5	10.7	13.9	21.5
6	1.0	4.0	9.0	12.8	16.7	25.7
7	1.2	4.6	10.5	15.0	19.5	30.0
8	1.4	5.3	12.0	17.1	22.2	34.3
9	1.5	5.9	13.5	19.3	25.0	38.6
10	1.7	6.6	15.0	21.4	27.8	42.9
11	1.9	7.3	16.5	23.5	30.6	47.2
12	2.0	7.9	18.0	25.7	33.4	51.5
13	2.2	8.6	19.5	27.8	36.1	55.8
14	2.4	9.2	21.0	30.0	38.9	60.1
15	2.6	9.9	22.5	32.1	41.7	64.4
16	2.7	10.6	24.0	34.2	44.5	68.6
17	2.9	11.2	25.5	36.4	47.3	72.9
18	3.1	11.9	27.0	38.5	50.0	77.2
19	3.2	12.5	28.5	40.7	52.8	81.5
20	3.4	13.2	30.0	42.8	55.6	85.8
22	3.7	14.5	33.0	47.1	61.2	94.4
24	4.1	15.8	36.0	51.4	66.7	103.0
25	4.3	16.5	37.5	53.5	69.5	107.3
26	4.4	17.2	39.0	55.6	72.3	111.5
28	4.8	18.5	42.0	59.9	77.8	120.1
30	5.1	19.8	45.0	64.2	83.4	128.7
32	5.4	21.1	48.0	68.5	89.0	137.3
34	5.8	22.4	51.0	72.8	94.5	145.9
35	6.0	23.1	52.5	74.9	97.3	150.2
36	6.1	23.8	54.0	77.0	100.1	154.4
38	6.5	25.1	57.0	81.3	105.6	163.0
40	6.8	26.4	60.0	85.6	111.2	171.6
45	7.7	29.7	67.5	96.3	125.1	193.1
50	8.5	33.0	75.0	107.0	139.0	214.5
55	9.4	36.3	82.5	117.7	152.9	236.0
60	10.2	39.6	90.0	128.4	166.8	257.4
65	11.1	42.9	97.5	139.1	180.7	278.9
70	11.9	46.2	105.0	149.8	194.6	300.3
75	12.8	49.5	112.5	160.5	208.5	321.8
80	13.6	52.8	120.0	171.2	222.4	343.2
85	14.5	56.1	127.5	181.9	236.3	364.7
90	15.3	59.4	135.0	192.6	250.2	386.1
95	16.2	62.7	142.5	203.3	264.1	407.6
100	17.0	66.0	150.0	214.0	278.0	429.0
125	21.3	82.5	187.5	267.5	347.5	536.3
150	25.5	99.0	225.0	321.0	417.0	643.5
175	29.8	115.5	262.5	374.5	486.5	750.8
200	34.0	132.0	300.0	428.0	556.0	858.0

VOLUME OF ANNULUS AROUND 2" CASING

CUBIC FEET PER LINEAR FOOT

LENGTH (ft.)	DIAMETER OF SOIL BORING			INSIDE DIAMETER OF HOLLOW STEM AUGER		
				3.25	4.25	6.25
	2	4	6	7.25	8.25	10.25
1	0	0.065	0.178	0.26	0.34	0.54
2	0	0.13	0.4	0.5	0.7	1.1
3	0	0.20	0.5	0.8	1.0	1.6
4	0	0.26	0.7	1.0	1.4	2.2
5	0	0.33	0.9	1.3	1.7	2.7
6	0	0.39	1.1	1.6	2.0	3.2
7	0	0.46	1.2	1.8	2.4	3.8
8	0	0.52	1.4	2.1	2.7	4.3
9	0	0.59	1.6	2.3	3.1	4.9
10	0	0.65	1.8	2.6	3.4	5.4
11	0	0.72	2.0	2.9	3.7	5.9
12	0	0.78	2.1	3.1	4.1	6.5
13	0	0.85	2.3	3.4	4.4	7.0
14	0	0.91	2.5	3.6	4.8	7.6
15	0	0.98	2.7	3.9	5.1	8.1
16	0	1.04	2.8	4.2	5.4	8.6
17	0	1.11	3.0	4.4	5.8	9.2
18	0	1.17	3.2	4.7	6.1	9.7
19	0	1.24	3.4	4.9	6.5	10.3
20	0	1.30	3.6	5.2	6.8	10.8
22	0	1.43	3.9	5.7	7.5	11.9
24	0	1.56	4.3	6.2	8.2	13.0
25	0	1.63	4.5	6.5	8.5	13.5
26	0	1.69	4.6	6.8	8.8	14.0
28	0	1.82	5.0	7.3	9.5	15.1
30	0	1.95	5.3	7.8	10.2	16.2
32	0	2.08	5.7	8.3	10.9	17.3
34	0	2.21	6.1	8.8	11.6	18.4
35	0	2.28	6.2	9.1	11.9	18.9
36	0	2.34	6.4	9.4	12.2	19.4
38	0	2.47	6.8	9.9	12.9	20.5
40	0	2.60	7.1	10.4	13.6	21.6
45	0	2.9	8.0	11.7	15.3	24.3
50	0	3.3	8.9	13.0	17.0	27.0
55	0	3.6	9.8	14.3	18.7	29.7
60	0	3.9	10.7	15.6	20.4	32.4
65	0	4.2	11.6	16.9	22.1	35.1
70	0	4.6	12.5	18.2	23.8	37.8
75	0	4.9	13.4	19.5	25.5	40.5
80	0	5.2	14.2	20.8	27.2	43.2
85	0	5.5	15.1	22.1	28.9	45.9
90	0	5.9	16.0	23.4	30.6	48.6
95	0	6.2	16.9	24.7	32.3	51.3
100	0	6.5	17.8	26.0	34.0	54.0
125	0	8.1	22.3	32.5	42.5	67.5
150	0	9.8	26.7	39.0	51.0	81.0
175	0	11.4	31.2	45.5	59.5	94.5
200	0	13.0	35.6	52.0	68.0	108.0

GALLONS PER LINEAR FOOT

LENGTH (ft.)	DIAMETER OF SOIL BORING			INSIDE DIAMETER OF HOLLOW STEM AUGER		
				3.25	4.25	6.25
	2	4	6	7.25	8.25	10.25
1	0	0.491	1.33	1.91	2.55	4.06
2	0	1.0	2.7	3.8	5.1	8.1
3	0	1.5	4.0	5.7	7.7	12.2
4	0	2.0	5.3	7.6	10.2	16.2
5	0	2.5	6.7	9.6	12.8	20.3
6	0	2.9	8.0	11.5	15.3	24.4
7	0	3.4	9.3	13.4	17.9	28.4
8	0	3.9	10.6	15.3	20.4	32.5
9	0	4.4	12.0	17.2	23.0	36.5
10	0	4.9	13.3	19.1	25.5	40.6
11	0	5.4	14.6	21.0	28.1	44.7
12	0	5.9	16.0	22.9	30.6	48.7
13	0	6.4	17.3	24.8	33.2	52.8
14	0	6.9	18.6	26.7	35.7	56.8
15	0	7.4	20.0	28.7	38.3	60.9
16	0	7.9	21.3	30.6	40.8	65.0
17	0	8.3	22.6	32.5	43.4	69.0
18	0	8.8	23.9	34.4	45.9	73.1
19	0	9.3	25.3	36.3	48.5	77.1
20	0	9.8	26.6	38.2	51.0	81.2
22	0	10.8	29.3	42.0	56.1	89.3
24	0	11.8	31.9	45.8	61.2	97.4
25	0	12.3	33.3	47.8	63.8	101.5
26	0	12.8	34.6	49.7	66.3	105.6
28	0	13.7	37.2	53.5	71.4	113.7
30	0	14.7	39.9	57.3	76.5	121.8
32	0	15.7	42.6	61.1	81.6	129.9
34	0	16.7	45.2	64.9	86.7	138.0
35	0	17.2	46.6	66.9	89.3	142.1
36	0	17.7	47.9	68.8	91.8	146.2
38	0	18.7	50.5	72.6	96.9	154.3
40	0	19.6	53.2	76.4	102.0	162.4
45	0	22.1	59.9	86.0	114.8	182.7
50	0	24.6	66.5	95.5	127.5	203.0
55	0	27.0	73.2	105.1	140.3	223.3
60	0	29.5	79.8	114.6	153.0	243.6
65	0	31.9	86.5	124.2	165.8	263.9
70	0	34.4	93.1	133.7	178.5	284.2
75	0	36.8	99.8	143.3	191.3	304.5
80	0	39.3	106.4	152.8	204.0	324.8
85	0	41.7	113.1	162.4	216.8	345.1
90	0	44.2	119.7	171.9	229.5	365.4
95	0	46.6	126.4	181.5	242.3	385.7
100	0	49.1	133.0	191.0	255.0	406.0
125	0	61.4	166.3	238.8	318.8	507.5
150	0	73.7	199.5	286.5	382.5	609.0
175	0	85.9	232.8	334.3	446.3	710.5
200	0	98.2	266.0	382.0	510.0	812.0

VOLUME OF ANNULUS AROUND 4" CASING

CUBIC FEET PER LINEAR FOOT

LENGTH (ft.)	DIAMETER OF SOIL BORING			INSIDE DIAMETER OF HOLLOW STEM AUGER		
				3.25	4.25	6.25
	2	4	6	7.25	8.25	10.25
1	0	0	0.11	0.2	0.26	0.46
2	0	0	0.2	0.4	0.5	0.9
3	0	0	0.3	0.6	0.8	1.4
4	0	0	0.4	0.8	1.0	1.8
5	0	0	0.6	1.0	1.3	2.3
6	0	0	0.7	1.2	1.6	2.8
7	0	0	0.8	1.4	1.8	3.2
8	0	0	0.9	1.6	2.1	3.7
9	0	0	1.0	1.8	2.3	4.1
10	0	0	1.1	2.0	2.6	4.6
11	0	0	1.2	2.2	2.9	5.1
12	0	0	1.3	2.4	3.1	5.5
13	0	0	1.4	2.6	3.4	6.0
14	0	0	1.5	2.8	3.6	6.4
15	0	0	1.7	3.0	3.9	6.9
16	0	0	1.8	3.2	4.2	7.4
17	0	0	1.9	3.4	4.4	7.8
18	0	0	2.0	3.6	4.7	8.3
19	0	0	2.1	3.8	4.9	8.7
20	0	0	2.2	4.0	5.2	9.2
22	0	0	2.4	4.4	5.7	10.1
24	0	0	2.6	4.8	6.2	11.0
25	0	0	2.8	5.0	6.5	11.5
26	0	0	2.9	5.2	6.8	12.0
28	0	0	3.1	5.6	7.3	12.9
30	0	0	3.3	6.0	7.8	13.8
32	0	0	3.5	6.4	8.3	14.7
34	0	0	3.7	6.8	8.8	15.6
35	0	0	3.9	7.0	9.1	16.1
36	0	0	4.0	7.2	9.4	16.6
38	0	0	4.2	7.6	9.9	17.5
40	0	0	4.4	8.0	10.4	18.4
45	0	0	5.0	9.0	11.7	20.7
50	0	0	5.5	10.0	13.0	23.0
55	0	0	6.1	11.0	14.3	25.3
60	0	0	6.6	12.0	15.6	27.6
65	0	0	7.2	13.0	16.9	29.9
70	0	0	7.7	14.0	18.2	32.2
75	0	0	8.3	15.0	19.5	34.5
80	0	0	8.8	16.0	20.8	36.8
85	0	0	9.4	17.0	22.1	39.1
90	0	0	9.9	18.0	23.4	41.4
95	0	0	10.5	19.0	24.7	43.7
100	0	0	11.0	20.0	26.0	46.0
125	0	0	13.8	25.0	32.5	57.5
150	0	0	16.5	30.0	39.0	69.0
175	0	0	19.3	35.0	45.5	80.5
200	0	0	22.0	40.0	52.0	92.0

GALLONS PER LINEAR FOOT

LENGTH (ft.)	DIAMETER OF SOIL BORING			INSIDE DIAMETER OF HOLLOW STEM AUGER		
				3.25	4.25	6.25
	2	4	6	7.25	8.25	10.25
1	0	0	0.84	1.48	1.95	3.46
2	0	0	1.7	3.0	3.9	6.9
3	0	0	2.5	4.4	5.9	10.4
4	0	0	3.4	5.9	7.8	13.8
5	0	0	4.2	7.4	9.8	17.3
6	0	0	5.0	8.9	11.7	20.8
7	0	0	5.9	10.4	13.7	24.2
8	0	0	6.7	11.8	15.6	27.7
9	0	0	7.6	13.3	17.6	31.1
10	0	0	8.4	14.8	19.5	34.6
11	0	0	9.2	16.3	21.5	38.1
12	0	0	10.1	17.8	23.4	41.5
13	0	0	10.9	19.2	25.4	45.0
14	0	0	11.8	20.7	27.3	48.4
15	0	0	12.6	22.2	29.3	51.9
16	0	0	13.4	23.7	31.2	55.4
17	0	0	14.3	25.2	33.2	58.8
18	0	0	15.1	26.6	35.1	62.3
19	0	0	16.0	28.1	37.1	65.7
20	0	0	16.8	29.6	39.0	69.2
22	0	0	18.5	32.6	42.9	76.1
24	0	0	20.2	35.5	46.8	83.0
25	0	0	21.0	37.0	48.8	86.5
26	0	0	21.8	38.5	50.7	90.0
28	0	0	23.5	41.4	54.6	96.9
30	0	0	25.2	44.4	58.5	103.8
32	0	0	26.9	47.4	62.4	110.7
34	0	0	28.6	50.3	66.3	117.6
35	0	0	29.4	51.8	68.3	121.1
36	0	0	30.2	53.3	70.2	124.6
38	0	0	31.9	56.2	74.1	131.5
40	0	0	33.6	59.2	78.0	138.4
45	0	0	37.8	66.6	87.8	155.7
50	0	0	42.0	74.0	97.5	173.0
55	0	0	46.2	81.4	107.3	190.3
60	0	0	50.4	88.8	117.0	207.6
65	0	0	54.6	96.2	126.8	224.9
70	0	0	58.8	103.6	136.5	242.2
75	0	0	63.0	111.0	146.3	259.5
80	0	0	67.2	118.4	156.0	276.8
85	0	0	71.4	125.8	165.8	294.1
90	0	0	75.6	133.2	175.5	311.4
95	0	0	79.8	140.6	185.3	328.7
100	0	0	84.0	148.0	195.0	346.0
125	0	0	105.0	185.0	243.8	432.5
150	0	0	126.0	222.0	292.5	519.0
175	0	0	147.0	259.0	341.3	605.5
200	0	0	168.0	296.0	390.0	692.0

GROUT MIXTURES

PORTLAND CEMENT GROUT

CUBIC FEET	CEMENT 94 lb. sack	BENTONITE lbs.	WATER gallons
1	0.6339	3.17	5.07
1.577	1.0	5.0	8.0
2	1.27	6.3	10.1
3	1.90	9.5	15.2
4	2.54	12.7	20.3
5	3.17	15.9	25.4
6	3.80	19.0	30.4
7	4.44	22.2	35.5
8	5.07	25.4	40.6
9	5.71	28.5	45.6
10	6.34	31.7	50.7
11	6.97	34.9	55.8
12	7.61	38.0	60.8
13	8.24	41.2	65.9
14	8.87	44.4	71.0
15	9.51	47.6	76.1
16	10.14	50.7	81.1
17	10.78	53.9	86.2
18	11.41	57.1	91.3
19	12.04	60.2	96.3
20	12.68	63.4	101.4
22	13.95	69.7	111.5
24	15.21	76.1	121.7
25	15.85	79.3	126.8
26	16.48	82.4	131.8
28	17.75	88.8	142.0
30	19.02	95.1	152.1
32	20.28	101.4	162.2
34	21.55	107.8	172.4
35	22.19	111.0	177.5
36	22.82	114.1	182.5
38	24.09	120.5	192.7
40	25.36	126.8	202.8
45	28.5	142.7	228.2
50	31.7	158.5	253.5
55	34.9	174.4	278.9
60	38.0	190.2	304.2
65	41.2	206.1	329.6
70	44.4	221.9	354.9
75	47.5	237.8	380.3
80	50.7	253.6	405.6
85	53.9	269.5	431.0
90	57.1	285.3	456.3
95	60.2	301.2	481.7
100	63.4	317.0	507.0
125	79.2	396.3	633.8
150	95.1	475.5	760.5
175	110.9	554.8	887.3
200	126.8	634.0	1014.0

BENTONITE GROUT

CUBIC FEET	BENTONITE 50 lb sack	WATER gallons
1	0.444	6.22
2	0.9	12.4
2.25	1	14
3	1.3	18.7
4	1.8	24.9
5	2.2	31.1
6	2.7	37.3
7	3.1	43.5
8	3.6	49.8
9	4.0	56.0
10	4.4	62.2
11	4.9	68.4
12	5.3	74.6
13	5.8	80.9
14	6.2	87.1
15	6.7	93.3
16	7.1	99.5
17	7.5	105.7
18	8.0	112.0
19	8.4	118.2
20	8.9	124.4
22	9.8	136.8
24	10.7	149.3
25	11.1	155.5
26	11.5	161.7
28	12.4	174.2
30	13.3	186.6
32	14.2	199.0
34	15.1	211.5
35	15.5	217.7
36	16.0	223.9
38	16.9	236.4
40	17.8	248.8
45	20.0	279.9
50	22.2	311.0
55	24.4	342.1
60	26.6	373.2
65	28.9	404.3
70	31.1	435.4
75	33.3	466.5
80	35.5	497.6
85	37.7	528.7
90	40.0	559.8
95	42.2	590.9
100	44.4	622.0
125	55.5	777.5
150	66.6	933.0
175	77.7	1088.5
200	88.8	1244.0

GEO STORE

BRAINARD • KILMAN

1-800-241-9468

Atlanta, Orlando, Raleigh, St. Louis, Houston

FIELD FACTS

Volume of Schedule 40 PVC Pipe

Diameter	O.D.	I.D.	Volume Gal/Linear Ft.	Weight of Water: Lbs/Lineal Ft.
1 1/4"	1.660"	1.380"	0.08	0.64
2"	2.375"	2.067"	0.17	1.45
3"	3.500"	3.068"	0.38	3.20
4"	4.500"	4.026"	0.66	5.51
6"	6.625"	6.065"	1.5	12.5
8"	8.625"	7.981"	2.6	21.65
12"	12.750"	11.938"	5.81	48.44

Volume of Open Borehole and Annulus Between Casing and Hole

Hole Diameter	Volume/ Lineal Ft. of Hole Gal.	Cu.Ft.	Nominal Casing Diameter	Volume/ Lineal Ft. of Annulus Gal.	Cu.Ft.	Lbs Sand/ Lineal Ft. of Annulus	Lbs 1/2" Pellets Per Lineal Ft. of Annulus
7 1/4"	2.14	.29	1 1/4"	2.03	0.27	27	21
7 1/4"	2.14	.29	2"	1.91	0.26	26	20
7 3/4"	2.45	.33	2"	2.22	0.30	30	23
8 1/4"	2.78	.37	2"	2.55	0.34	34	26
10 1/4"	4.29	.57	2"	4.06	0.54	54	41
8 1/4"	2.78	.37	3"	2.28	0.30	30	23
10 1/4"	4.29	.57	3"	3.79	0.51	51	38
12 1/4"	6.13	.82	3"	5.62	0.75	75	57
8 1/4"	2.78	.37	4"	1.95	0.26	26	20
10 1/4"	4.29	.57	4"	3.46	0.46	46	35
12 1/4"	6.13	.82	4"	5.30	0.71	71	54
12 1/4"	6.13	.82	6"	4.33	0.58	58	44

Miscellaneous Data

1 Cu. Ft. = 7.5 gal. (approx.)
1 Gallon = .134 Cu. Ft. (approx.)
1 Cu. Yd. = 202 gal. (approx.)
1 Gallon = .005 Cu. Yd. (approx.)
1 Gallon of Water = 8.34 lbs. (approx.)
1 Cu. Ft. of Fresh Water = 62.4 lbs. (approx.)

PSI = .434 x the height of the water column in feet
Feet of Head = PSI x 2.304
1 Barrel = 42 gallons (approx.)
1 Sack of Sand = 1 Cu. Ft. and approx. 100 lbs.
1 Sack of Cement = 1 Cu. Ft. and approx. 96 lbs.
1 Pail of Bentonite Pellets = 50 lbs. (approx.)

APPENDIX F

Environmental Science Corporation Laboratory Quality Assurance Program Manual on Compact Disk

APPENDIX G

Site-Specific Health and Safety Plan

SAFETY AND HEALTH PLAN

FOR USE WITH EPA-APPROVED REMEDIAL ACTION PLAN

January 2010

TABLE OF CONTENTS

1.0 APPLICABILITY 2
2.0 SAFETY AND HEALTH ADMINISTRATION 2
3.0 MEDICAL SURVEILLANCE REQUIREMENTS 3
4.0 EMPLOYEE TRAINING REQUIREMENTS 3
5.0 SITE HISTORY/SCOPE OF SERVICES 4
6.0 HAZARD ASSESSMENT 4
6.1 Physical/Biological Hazards 5
7.0 AIR MONITORING REQUIREMENTS 5
7.1 Organic Vapors 6
8.0 PERSONAL PROTECTIVE EQUIPMENT REQUIREMENTS 6
9.0 SITE CONTROL 6
10.0 DECONTAMINATION 7
10.1 Personnel Decontamination 7
10.2 Equipment Decontamination 7
11.0 SITE COMMUNICATIONS 7
12.0 STANDARD SAFE OPERATING PROCEDURES 8
13.0 EMERGENCY PROCEDURES 8
13.1 Emergency Contacts 8
13.1.1 Emergency Telephone Numbers 8
13.2 Personal Injury 9
13.3 Evacuation and Shutdown Procedures 9
14.0 HEAT STRESS 10
14.1 Level D/D Modified PPE 10
14.2 Level C, B or A PPE 10
15.0 COLD STRESS 11
ACKNOWLEDGMENT OF INSTRUCTION 12
SAFETY & HEALTH APPENDICES: 12

1.0 APPLICABILITY

This Site Safety and Health Plan (SHP) has been developed to define the protocols and requirements to be followed by Terracon personnel while performing assessment activities for this EPA Brownfields Assessment project. Immediately prior to site activities, the designated Site Safety and Health Officer (SSO) will conduct a safety briefing and review the contents of this Plan with all Terracon site personnel. Terracon employees participating in this project will review this Plan and sign the Acknowledgment of Instruction page prior to the start of project activity.

Site activities performed by Terracon personnel will be conducted in accordance with applicable provisions of the Occupational Safety and Health Act of 1970 and the standards issued thereunder, including but not limited to the Hazardous Waste Site Operations and Emergency Response standard (OSHA 29 CFR 1910.120) and the Respiratory Protection standard (29 CFR 1910.134).

2.0 SAFETY AND HEALTH ADMINISTRATION

The Terracon Project Manager will be ultimately responsible for ensuring that Terracon personnel at this project site perform their duties in accordance with the safety and health provisions contained in this Plan. The designated Site Safety and Health Officer (SSO) will monitor compliance with this Plan during field activities. The Project Manager and/or SSO will ensure that site emergency telephone numbers are completed and that the location of and directions to the nearest emergency medical facility are included in this Plan prior to site mobilization. All Terracon field team members engaged in project activities will be required to sign the "Acknowledgment of Instruction" form upon completion of the initial site briefing. The SSO will ensure that a copy of this Plan is available on site for the duration of project activities.

The individuals listed below are responsible for implementation and enforcement of this Safety and Health Plan.

TITLE	NAME	PHONE
Project Manager:	David Koch, Principal	913-492-7777
Project Coordinator:	Eric Gorman	913-492-7777
Corporate Safety and Health Manager:	Gary K. Bradley, CSP, CHMM	913-599-6886
Site Safety and Health Officer:	Wil King or Ashley Stuerke, Site Supervisor	913-205-7390 913-231-5172

If hazardous conditions develop or appear imminent during the course of project activity, the SSO in conjunction with the Terracon Corporate Safety and Health Manager, will coordinate actions required to safeguard Terracon personnel. Additional safety measures will be verbally communicated to Terracon project participants, recorded in writing and appended to this SHP.

The Terracon Project Manager and/or SSO are responsible for:

- Ensuring that subordinate personnel have read and understood this Plan.
- Ensuring that subordinate personnel adhere to applicable provisions of this Plan.
- Ensuring that corrective actions are enforced.

3.0 MEDICAL SURVEILLANCE REQUIREMENTS

Subsurface contamination may be encountered during the course of this investigation. All Terracon personnel participating in this project shall be enrolled in a health monitoring program in accordance with the provisions of OSHA 29 CFR 1910.120 and 1910.134. Each project participant shall be certified by a Doctor of Medicine as fit for respirator and semi-permeable/impermeable protective equipment use. All personnel shall have received an environmental physical examination within one year prior to the start of project activities. The content of acceptable physical examinations will be determined by a consulting physician. Follow-up medical examinations will also be provided in the event of job site injury or unprotected exposure to contaminants in excess of eight-hour time weighted average permissible exposure limits. Certificates of medical examination will be maintained by the Corporate Safety and Health Manager.

4.0 EMPLOYEE TRAINING REQUIREMENTS

All Terracon personnel participating in this project must have completed 40 hour Hazardous Waste Operations Training and at least three days of supervised field activity per requirements of OSHA 29 CFR 1910.120. In addition, a current 8-hour annual refresher training certificate will be required for all personnel. Training certificates for all project personnel will be maintained by the Corporate Safety and Health Manager and/or the SSO at the project command center. The SSO and at least one other Terracon site participant shall maintain a current certification in basic First Aid training as provided by the American Red Cross or US Bureau of Mines.

Prior to the start of site activities, all Terracon project personnel will participate in a pre-project safety and health briefing outlining the contents of this SHP. The personnel responsible for project safety and health will be addressed, as will site history, scope of work, site control measures, emergency procedures and site communications. Daily "tailgate" safety and health

briefings will be presented by the SSO at the start of each work day. Records of safety and health briefings will be maintained for the duration of this project.

5.0 SITE HISTORY/SCOPE OF SERVICES

The United States Environmental Protection Agency (EPA) selected the City of Springfield (City) for a brownfields assessment grant. The City can use grant funds to conduct environmental assessments at sites within the 250-acre Jordan Valley Park. This site is among 574 brownfields parcels identified during Springfield's first EPA brownfields assessment demonstration pilot. EPA Brownfield grant allows the City to conduct Phase II Environmental Site Assessments (ESAs) as part of property evaluation and to support All Appropriate Inquiry (AAI) relative to liability protection prior to land acquisition. The City will conduct the investigation of the Site under the guidance of the EPA. Assessment and evaluation were developed for consistency with consideration of potential future enrollment with the Missouri Department of Natural Resources Brownfields/Voluntary Cleanup Program (B/VCP).

This sampling activity was designed from information previously gathered by the City or other contractors. For detailed discussion of previous Phase I and II Environmental Site Assessment activities reference each site-specific *Section 2.0* of the respective *Remedial Action Plan*, February 2010, as;

- Job No. B5097016A: *REMEDIAL ACTION PLAN - for West Meadows Site #1.,* dated February 2010, Springfield, Missouri. Site #1 of the Brownfields Assessment Grant Project, United States Environmental Protection Agency – Region 7, EPA Cooperative Agreement BF-BF-98796601-0, Springfield, Missouri.

6.0 HAZARD ASSESSMENT

Previous assessment has not identified potential conditions of imminent hazard or chemicals at residual concentrations that would reasonably pose an acute (immediate) health hazard without protective personal equipment. The site poses the normal physical hazards of working on municipal, previously developed property. The site has the added potential hazard of working near active railroad lines.

6.1 Chemical Hazard Assessment

Potential chemical exposures are anticipated to be related to dermal contact with residual concentrations of petroleum compounds, at times possibly co-mingled with residual concentrations of hazardous substances as volatile organic compounds, semi-volatile organic compounds and heavy metals. Anticipated concentrations of chemicals in airborne dust or as volatile vapors are considered a lower probability for potential exposure.

Although not anticipated on this property, coal-tar pitch volatiles and semi-volatiles from historical former manufactured gas plant (FMGP) operations have been encountered on nearby properties from sites north of Jordan Creek and west of Main Avenue. Theses FMGP residues encountered had good visual and olfactory warning properties, exhibiting dark staining and pungent chemical odor at parts per billion concentrations in soils.

6.2 Biological Hazards

No biological hazards are indicated by previous Phase I assessment or anticipated for this site assessment.

6.3 Physical Hazards

Partially buried sharp or jagged debris, broken glass and rusty metal pose trip, puncture and potential laceration hazards can occur in rail and Brownfields areas. Safety footwear is required for this project.

Smoking is banned while within 50 feet of sampling activities.

Activities to be performed on site will involve truck-mounted drill rigs. Personnel should be aware that as personal protective equipment increases, dexterity and visibility may be impacted and performing some tasks may be more difficult. Personnel must remain outside the swing radius of drill equipment at all times. Operators will ascertain the direction of prevailing winds at each boring location. Drill rigs will be positioned to the upwind side of each proposed bore hole unless precluded by other considerations of safety (e.g., utility clearance, railroad clearance).

6.4 Railway Hazards

<u>No physical sampling or location of equipment will occur within 25 feet of centerline</u> of railway tracks. This includes the physical location of the sampling point and the placement of mobile equipment needed for the sampling. Staff will maintain this separation at all times.

Staff must be aware of special considerations when working in rail corridors and be able to identify new hazards while in the field. Staff will review as part of this safety and health plan the attached “RAILROAD SAFETY AWARENESS TRAINING - Roadway Worker Protection, On-track Safety Program”.

7.0 AIR MONITORING REQUIREMENTS

The designated Site Safety Officer will ensure that both a photoionization detector (PID) are mobilized to the project site on each day of boring activity. Photoionization detectors will be

calibrated with isobutylene calibration gas (100--250 ppm). A response factor of 1.0 will be used during calibration and field operation of photoionization detectors used on this project site. Operator manuals will accompany each instrument to the project site.

7.1 Organic Vapors

Frequent photoionization detector readings will be taken in the breathing zone of site personnel during soil boring activities. If sustained (> 5 minutes continuous) breathing zone OVM readings exceed **5 ppm** above background or if any unusual chemical odors are noted, personnel will halt, allow ventilation to occur while they contact the project Safety Officer for direction.

8.0 PERSONAL PROTECTIVE EQUIPMENT REQUIREMENTS

Intrusive site activities may begin in **LEVEL D** personal protective equipment to include:

- **Standard Work Uniform**
- **Hard Hat**
- **Rubberized Safety Foot Wear (Steel Toe/Shank per ANSI Z-41)**
- **Impermeable Gloves (PVC, Neoprene or Nitrile)**
- **Safety Eye Wear (ANSI Z-87 approved)**

9.0 SITE CONTROL

The area within a 20 foot radius of each boring will be considered the site contaminant zone. Anyone entering this area must be wearing the appropriate personal protective equipment as described in this plan or any addendum to this plan. Personnel entering the contaminant zone must have the authorization of the Terracon SSO. All personnel allowed within the contaminant zone must meet the training and medical surveillance requirements of OSHA 29 CFR 1910.120 (see Section 3.0 and Section 4.0 of this Plan).

Safety cones, barrier fencing or barrier tape will be established at the 20 foot radius if the use of such barricade could reasonably prevent unauthorized access of, and potential injury to, non-authorized personnel. No eating, drinking or smoking will be permitted in either the contaminant or contaminant reduction zones.

10.0 DECONTAMINATION

10.1 Personnel Decontamination

Personnel decontamination is necessary on all potentially contaminated intrusive projects. Personnel decontamination for this project will consist of washing off safety footwear, proper cleaning or disposal of outer and inner gloves and thorough washing of face, arms and hands.

A full body shower will be required as soon as possible upon leaving the project site.

Expendable personal protective equipment will be placed in plastic trash bags, sealed and disposed of per client agreement. Decontamination solutions will be containerized or disposed of as arranged by Project Manager.

10.2 Equipment Decontamination

Decontamination of equipment will be performed to limit the migration of contaminants off-site. All equipment will be cleaned prior to site entry to remove grease, oil and encrusted soil. Decontamination of large equipment will consist of physically removing gross contamination with shovels, brushes etc. followed by detergent and water high pressure wash with a clean water rinse. Cuttings and decontamination fluids will be handled as outlined in the project work plan.

11.0 SITE COMMUNICATIONS

Communication between personnel within the Exclusion Zone will be via verbal communication or hand signals. Visual contact between members of task teams should be possible throughout the course of project activities. Contact with the SSO will be through direct verbal communication. The hand signals listed below will be used by personnel wherever respiratory protection and/or equipment noise limit verbal communication.

Signal	Meaning
Thumbs Up	OK, all is well
Grab throat with both hands	Can't breathe
Shake head, thumbs down	NO, negative
Point right (When facing equipment operator)	Move/steer left
Point left (When facing equipment operator)	Move/steer right
Grab partner's wrist	Leave area immediately

12.0 STANDARD SAFE OPERATING PROCEDURES

- Terracon personnel will remain to the UPWIND side and at least 2 feet from the edge of all excavations during observation and monitoring activities.

- If site activities interrupt the normal flow of pedestrian or vehicular traffic, appropriate barricades will be erected around the project site. Safety orange work vests will be worn by personnel working within 10 feet of any active roadway.

- The Site Safety Officer will ensure that unauthorized personnel do not enter the work zone. Authorized visitors will be briefed on site contaminants, personal protective equipment requirements and decontamination provisions of this SHP.

- The Site Safety Officer will continually inspect the work area for infractions of safety and health requirements contained in this plan.

- The Site Safety Officer will investigate and immediately report all accidents to the Corporate Safety and Health Manager.

- Site activities will be conducted only during daylight hours unless adequate portable lighting is mobilized to the project site.

13.0 EMERGENCY PROCEDURES

13.1 Emergency Contacts

The Project Manager is responsible for obtaining and recording the following emergency information prior to site mobilization:

Location of Nearest Telephone: On-site Cellular phones that are charged at all times.
Nearest Hospital/Clinic: Saint John's Hospital
Phone: (417) 820-2600
Estimated Drive Time: Approximately 10 minutes
Directions From Site: **See written directions with map attachment at end of plan.**

13.1.1 Emergency Telephone Numbers

Ambulance:	**911**
Fire Department:	**911**
Police:	**911**
Project Manager:	**(913) 492-7777 Work**
	(816) 509-2219 Cell

Safety and Health Manager:	**(913)-205-7390**
	913-231-5172

13.2 Personal Injury

The SSO and at least one other individual on site will be appropriately trained to administer first aid. A certificate issued by the American Red Cross, National Safety Council or equivalent will be considered acceptable.

For minor injuries, such as cuts, burns, exhaustion, heat cramps, insect stings, etc., the affected employee will be removed to an uncontaminated area. The SSO or other designated employee trained in first aid procedures will administer appropriate first aid. If the injury warrants additional medical attention, the affected employee will be properly decontaminated and transported to the nearest hospital or emergency medical facility.

For more serious injuries the Site Safety Officer or designee will summon an ambulance to the project site. No attempt will be made by Terracon personnel to move the victim, without the aid and/or instructions of qualified medical personnel.

Where air monitoring indicates the absence of toxic gases or vapors, the ambulance will be directed to the affected employee. If site conditions warrant and as time permits, the wheels of the ambulance will be decontaminated with high pressure wash. The SSO or designee will accompany the ambulance to the medical facility, and provide guidance concerning additional decontamination which may be required for the injured employee, ambulance or attendants.

Whenever an injury occurs on sites with contamination requiring personal protective equipment greater than Level D modified, a minimum of two employees will don appropriate equipment and proceed to the victim. An ambulance will be called immediately. If the extent of injuries permit, the injured employee will be removed to fresh air. Appropriate first aid will be administered.

If rescuer(s) assess that the victim cannot be removed without a stretcher or other specialized equipment, the victim will be removed at the earliest possible moment by appropriately attired Terracon personnel with the direction and/or assistance of qualified medical response personnel. The injured employee will be immediately decontaminated and transported to the nearest medical facility. A crew member designated by the SSO will inform the ambulance crew of contaminants of concern and provide assistance with additional decontamination if required.

13.3 Evacuation and Shutdown Procedures

The SSO will establish and notify site personnel of emergency "rally" points. In the event of a site emergency, personnel will immediately exit the site and assemble at the designated rally

point. Evacuation routes will be dependent on site topography and wind conditions. The routes will be selected and presented by the SSO daily prior to site activity.

If emergency evacuation becomes necessary, the SSO will sound the emergency alarm (e.g. support vehicle horn or compressed air horn). Personnel will safely shutdown all electrical and mechanical equipment and quickly proceed to closest designated rally point. The SSO will then account for each crew member on site.

In the event that a Terracon employee does not report to the designated rally point within 5 minutes of the evacuation alarm, the SSO will perform an immediate assessment of site conditions. If site conditions do not pose an immediate hazard to life or health, the SSO will initiate search and rescue efforts utilizing two crew members attired in appropriate personal protective equipment.

14.0 HEAT STRESS

14.1 Level D/D Modified PPE

Whenever ambient temperature exceeds 70 degrees F and personal protective equipment requirements are Level D or Level D modified, the following heat stress monitoring and preventive measures will be implemented.

At least one gallon of water will be available for each field employee during each day of site activity. The designated Site Safety Officer and one designee will observe personnel for signs of heat stress (excessive perspiration, flushed skin, nausea, etc.).

If such signs are observed, affected workers will be required to leave the contaminant zone, loosen protective clothing and rest. During the rest period affected personnel will drink at least one 8 oz. glass of cool water. Pulse will be checked at the beginning of the rest period. Personnel will not return to work until pulse rate is less than 90.

14.2 Level C, B or A PPE

In addition to the above precautions, the following procedures will be implemented whenever the ambient temperature exceed 70 degrees F and personal protective equipment requirements are Level C or above. Ambient temperature will be measured with a dry bulb thermometer and percent cloud cover will be estimated:

1.0 = No Clouds
0.75 = 25% Clouds
0.5 = 50% Clouds
0.25 = 75% Clouds
0.0 = 100% Clouds).

Calculate the adjusted temperature using the following formula:

ADJUSTED TEMPERATURE = 13 * (% CLOUD COVER) + DRY TEMPERATURE

Rest regimens and physiological monitoring (oral temperature and radial pulse) will be implemented at frequencies dependent upon adjusted temperature.

Adjusted Temperature	Rest Period/Monitoring Frequency
90+	After 15 minutes
87.5-90	After 30 minutes
82.5-87.4	After 60 minutes
77.5-82.5	After 90 minutes
70.5-77.4	After 120 minutes

Employees will return to work only after oral temperature is below 99.7 degrees F and pulse rate < 90. Fluid replacement will be encouraged during each rest period. The use of stimulants and alcoholic beverages in off hours will be discouraged.

15.0 COLD STRESS

Persons working outdoors in low temperatures, especially at or below freezing are subject to cold stress. Exposure to extreme cold for a short time can cause severe injury to the surface of the body or result in profound generalized cooling which, in extreme cases, can lead to coma and death. Areas of the body which have high surface area, such as fingers, toes and ears are most susceptible.

Protective clothing generally does not provide protection against cold stress. In many instances it may increase susceptibility due to excessive perspiration which can rapidly cool the body when exposed to cold, windy conditions. The greatest incremental increase in wind chill occurs when a wind of 5 mph increases to 10 mph. And, because water conducts heat approximately 240 times faster than air, the body will cool rapidly when chemical protective equipment is removed if undergarments are saturated with perspiration.

Whenever ambient temperatures are expected to be below freezing, Terracon personnel will consult the cold stress section of the Terracon Safety and Health Policy and Procedures Manual to re-familiarize themselves with signs, symptoms and treatment of cold injuries. Thermal boot, glove and hard hat liners will be mandatory for all personnel conducting field activities in ambient temperatures below freezing.

ACKNOWLEDGMENT OF INSTRUCTION

The following must be completed prior to performing site activities. The following acknowledgment must be completed as accurately as possible. It is not a waiver. It is the only method used to compile your environmental on-the-job training and experience records. By written request you may obtain a copy of your environmental work record from the Safety and Health Manager.

PROJECT NAME: #02087079
Jordan Valley West Meadows Site #1
EPA Brownfields Cleanup Grant Project
Springfield, Missouri
EPA Cooperative Agreement BF-98796601-0

I understand that this project involves drilling at an EPA Brownfields Cleanup project site. I will refer to and abide by the personal protective equipment requirements contained in this plan. Potential for health risk from exposure to the site is expected to be low.

I have read this Site Safety and Health Plan and have received instructions for procedures to be followed. I have had my questions answered regarding safety and health.

Name: (Please Print)	**Signature**:	**Date:**
_____	_____	_____
_____	_____	_____
_____	_____	_____
_____	_____	_____

Safety Briefing Performed by:_____ **Date:** _____

Safety Briefing Performed by:_____ **Date:** _____

Personal Protective Equipment: LEVEL D/D Mod _X_ LEVEL C ___ (Stand-by)

AIR MONITORING RESULTS (Attach actual field data)

SAFETY & HEALTH APPENDICES:

Hospital Route Map, 1 page attached
Directions to Hospital, 1 page attached
Railroad Safety Awareness Training
Agency for Toxic Substances and Disease Registry (ATSDR) ToxFAQs

RAILROAD SAFETY AWARENESS TRAINING
ROADWAY WORKER PROTECTION/ON-TRACK SAFETY PROGRAM

ALWAYS EXPECT A TRAIN!!!

Any company or contractor, such as Terracon, who performs work on, or in proximity to, active railroad tracks is subject to Federal Railroad Administration Rules and regulations regarding on-track safety (49 CFR 214).

This document has been prepared because Terracon has contracted to conduct drilling and materials testing services for railroad right-of-way and/or grade crossing improvements. All Terracon personnel assigned to this project are informed that railroads take on-track safety precautions SERIOUSLY, and do not tolerate cutting corners or deviating from track safety requirements. This presentation is for your safety and to ensure the safe and timely completion of our project. Remember that trains are bigger, stronger and faster than you, and that tragedies can be avoided by adherence to railroad safety rules.

ALWAYS EXPECT A TRAIN!!!!

DEFINITIONS

FOULING A TRACK

Placement of an item or individual in such proximity to a track that the individual or equipment could be struck by a moving train or on-track equipment, or in any case is within four (4) feet of the field side of the near running rail.

LONE WORKER

An individual roadway worker who is NOT being afforded on-track safety by another roadway worker.

EXCLUSIVE TRACK OCCUPANCY

Protected area of track where trains are restricted by either controllers or flagmen.

LIVE TRACK

A track that is subject to train operation.

FOULING THE TRACK

- Each roadway worker is responsible for determining that on-track safety is provided before fouling any track or being where he or she could foul a track.

- A roadway worker or machine is fouling a track when the nearest rail of the track is within **4 FEET**.

CONTRACTORS

- Contractors such as Terracon who will be performing work activities on railroad property within 25 feet of the centerline of the track must develop and implement a roadway worker protection/ on-track safety program, and train employees in the program.

- Contractor employees must NOT perform work activities within 25 feet of the centerline of the track unless:

1. They have received on-track safety training and

2. Have met with a railroad employee coordinating their activities to establish a project-specific strategy for addressing roadway worker protection/on-track safety requirements.

- Railroad-specific Contractor Safety Orientation classes will be mandatory prior to engaging in railroad work within 25 feet of the centerline of any railroad track.

JOB BRIEFINGS

Job briefings will be conducted at the beginning of each work day. Briefings will include:

- Proposed work activity for the day
- Track safety methods to be employed
- Changes in track safety methods employed during preceding days
- Designation of the employee in charge
- Track limits and times of authority
- Tracks that may be fouled
- Controls on movement on adjacent tracks (if any)
- Means of providing warning if a lookout is used
- Designated place of safety where workers will clear for trains

ON-TRACK SAFETY PROCEDURES

Each rail carrier has developed a set of rules which are designed to protect employees during work on right of ways. Various methods are employed to prevent personnel and equipment from being struck during railroad repair or other work on active tracks.

Protection can consist of a controlled track shutdown (exclusive track occupancy) where the controllers, switchmen, etc. have blocked the track to train travel. It may also consist of work crews protected by a lookout and/or signalmen. Least protective is the Lone worker on an active track who relies on rail time schedules for protection.

NO TERRACON EMPLOYEE IS AUTHORIZED AS A LONE WORKER OR RAILROAD LOOKOUT UNLESS TRAINED AND BY THE SPECIFIC RAIL CARRIER FOR WHICH WORK IS BEING PERFORMED.

OCCUPYING TRACK ADJACENT TO LIVE TRACKS

Whenever large scale maintenance and construction crews (typically considered as 10 or more crew members) are occupying a track with a center spaced less than 25 feet from the center of an adjacent live track, the following requirements apply.

- Before fouling a track on a live track, review rail safety instructions as part of the daily job briefing.

- Obtain authority to occupy the track according to the Maintenance of Way Operating Rules.

- If the adjacent live track is a main track or controlled siding, a track bulletin form (see example attached) must be in effect on the adjacent track.

- Red flags or lights must be placed within the limits prescribed on the track bulletin form to proven unannounced movement on the adjacent track past the work area.

- DO NOT work between tracks while a train is passing.

As trains approach, the rail way employee in charge is responsible for stopping any equipment that, when operating, will foul the adjacent track.

WHEN WORK MAY BE CONTINUED WHILE TRAINS PASS

If equipment will not foul the adjacent track, the equipment may continue to work if the rail way employee in charge has instructed the passing train to pass people and equipment at:

- 40 mph or less on a tangent track

- 25 mph or less when curves or gradients obscure vision

TERRACON DRILL RIGS WILL REMAIN IN OPERATION WHILE TRAINS PASS IF, AND ***ONLY IF***, AUTHORIZED BY THE RAILWAY EMPLOYEE IN CHARGE.

WORK AT MULTIPLE LOCATIONS OVER EXTENDED DISTANCES

- When work crews are working at many locations over an extended distance, the railway employee in charge will divide the workers into subgroups.

- Each subgroup will be assigned a responsible person to act as a coordinator for that subgroup.

- The railway employee in charge will notify the subgroup coordinators when a train is approaching on an adjacent track.

- Each coordinator then warns subgroup employees and notifies the employee in charge when the subgroup employees have stopped work operations and secured their equipment.

- Methods used to warn subgroup employees of approaching trains must be identified in the job safety briefing.

WHEN WORK WILL *NOT* CONTINUE WHILE TRAIN IS PASSING

Workers must **STOP** working under the following conditions:

Work is being conducted in the middle track of three or more main tracks and trains are passing on both adjacent tracks at the same time.

A train is allowed to pass at speeds higher than:

- 40 mph on tangent tracks or
- 25 mph on tracks where curves or gradients obscure vision

The railway employee in charge must notify the employees of each subgroup and stop work prior to permitting trains to pass.

Workers must stop equipment, and secure it against movement immediately upon notification of the passing train.

SUMMARY

The very real hazard of both rail and vehicle traffic during work on railroad grade crossings requires continuous attention to safety. Railroad-specific work rules must be enforced as must standard Terracon safe operating procedures for drilling and materials testing operations.

All Terracon personnel who engage in work within 25 feet of active tracks MUST attend a railroad safety orientation course, and must be fully briefed in the specific project tasks prior to mobilizing to the job site. ***Proof or railroad safety orientation must be maintained on the employee's person for the duration of rail way work.***

Work on all projects on or near railroad tracks must be closely coordinated between Terracon, the client and railroad personnel. Work in many track right-of-way areas will require flaggers and/or lookouts prior to movement onto the tracks. Terracon personnel on site MUST attend briefings with client and railroad personnel prior to each day's site activity. Job safety briefings will be documented on the attached job safety briefing form. Documentation of job safety briefings will be maintained at the project site for the duration of the project.

Bing Maps

A: **725 W Olive St, Springfield, MO 65806-1813**

B: **1235 E Cherokee St, Springfield, MO 65804-2203**

Trip: **3.6 mi, 10 min**

My Notes

FREE! Use **Bing 411** to find movies, businesses & more: **800-BING-411**

A	**725 W Olive St, Springfield, MO 65806-1813**	**A–B: 3.6 mi** 10 min
	1. Depart **W Olive St**	0.1 mi
	2. Turn **right** onto **N Grant Ave**	0.1 mi
	3. Road name changes to **S Grant Ave**	0.8 mi
	4. Turn **left** onto **W Grand St** *CASEY'S GENERAL STORE on the corner*	0.4 mi
	5. Road name changes to **E Grand St**	0.9 mi
	6. Turn **right** onto **S National Ave** *CONOCO on the corner*	1.3 mi
	7. Turn **left** onto **E Cherokee St**	0.1 mi
B	8. Arrive at **1235 E Cherokee St** *The last intersection is S National Ave* *If you reach S Kickapoo Ave, you've gone too far*	

These directions are subject to the Microsoft®: Service Agreement and for informational purposes only. No guarantee is made regarding their completeness or accuracy. Construction projects, traffic, or other events may cause actual conditions to differ from these results. Map and traffic data © 2009 NAVTEQ™, AND™.

Trip: **3.6 mi, 10 min**

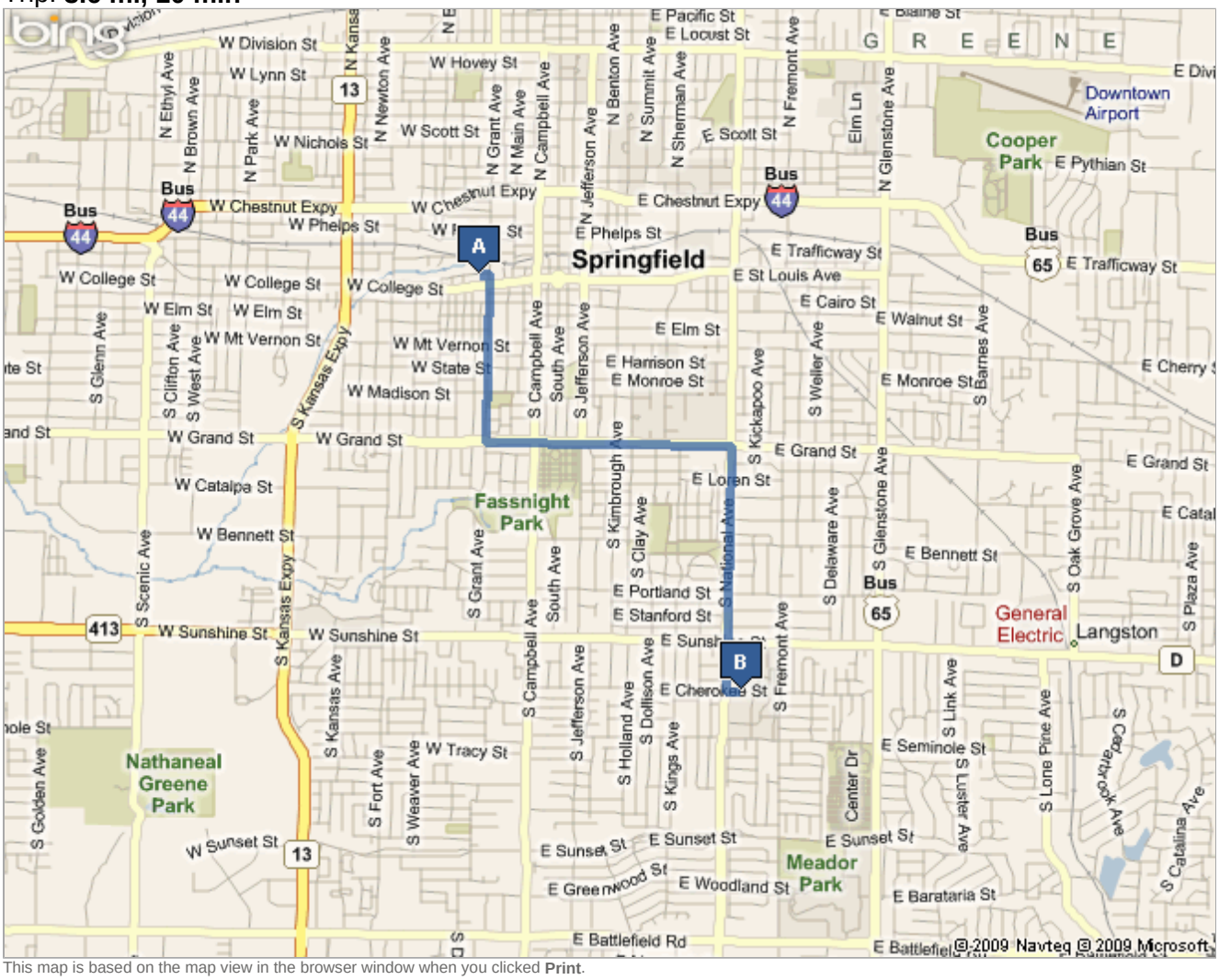

This map is based on the map view in the browser window when you clicked **Print**.

A: **725 W Olive St, Springfield, MO 65806-1813**

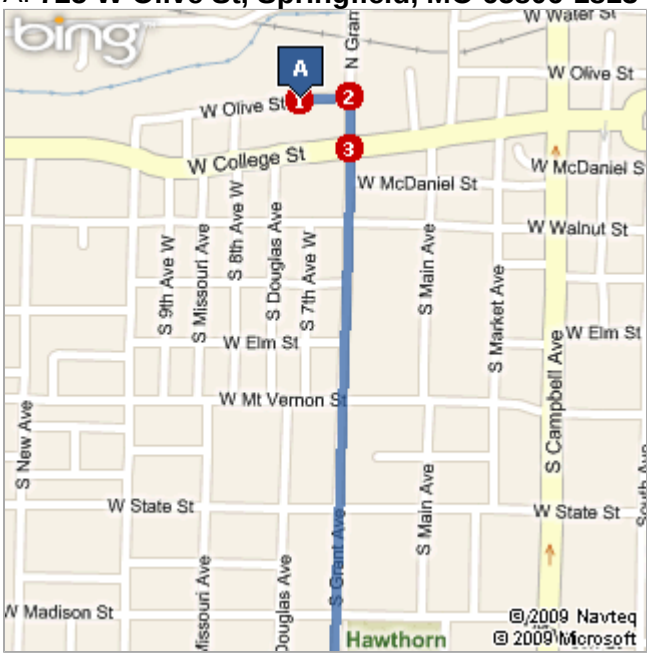
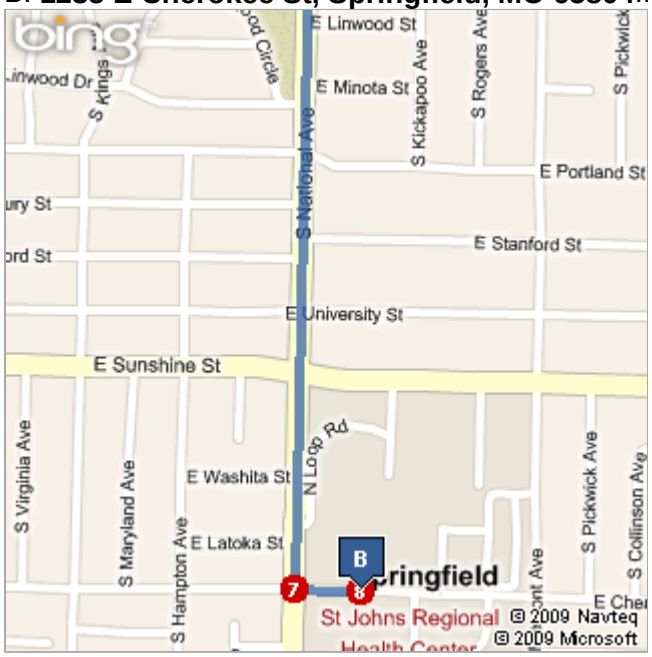
B: **1235 E Cherokee St, Springfield, MO 65804**..