INTER OFFICE

MEMO

To: Mrs. O'Mealey's, 210 E. Sunshine
From: Karen Chandler
Subject: Grease Interceptor
Date: February 1, 1996

On Friday, January 26, 1996, Gary DeLong (883-3535) called Randy Lyman about Mrs. O'Mealey's on 210 E. Sunshine. He said they had a backup last week in the restaurant and wanted to separate the kitchen and bathroom discharges to the sewer. Gene Pabst and I met Mr. DeLong at the restaurant at 9:30 a.m. He told us they can't figure out where the plumbing goes inside. He wants to route the line that is going into the grease interceptor now around it to keep the restroom waste out of the interceptor. We went into the kitchen area with Gary and he explained what he wanted to do inside. He wants to run a new line to the interceptor from the kitchen and put all of the sinks in the kitchen on it. He will install new floor drains, vents and cleanouts at this time. He told us he would like to put the dishwasher and the sink in that area on the main line that bypasses the interceptor. We told him we would talk to Linda Wilson about this, because we weren't sure what there policy was in this case. On Wednesday, January 31, 1996, I called Linda Wilson to talk to her about this. She said she had already talked to Gary about Mrs. O'Mealey's and she told him that he needs to put the dishwasher and all of the sinks on the line that goes through the interceptor. Linda mentioned that in the new interceptor guidelines, it is acceptable to put garbage disposal wastewater in a grease interceptor and she told Gary that she wants the disposal on the line going to the interceptor. Linda said that Joanne White is the manager of the restaurant.

Karen Chandler

Karen Chandler
WPCI II
SSE & B

cc: Randy Lyman, Sewer Surveillance and Billing Supervisor
Surveillance File ME020196.WPD

210 E. SUNSHINE

TELEPHONE LOG SHEET

INDUSTRY NAME Heritage Cafe. (210 E. Sunshine)
CONTACT PERSON Paul Handley
NUMBER CALLED 883-1626

DATE 8-12-93
TIME 11:15 A.M

PURPOSE FOR CALL

On Aug. 12th I returned Mr. Paul Hadley's call. He stated that they were having German Septic Tank Service pump out their outside grease interceptor once every two weeks. He thought this was a little much. He wanted someone to come out & Inspect it to see if was working properly. I told him that apparently it was working our else he would not be getting that many solids. I told him that when the interceptor was installed the bathroom line was not seperated from the kitchen line & everything goes through the interceptor. This may be the cause of some solids. I asked him if they had been checking the depths of the grease before it was pumped. Apparently they had not. I also asked about what they were putting down their garbage disposals. I asked about chicken bones. He said that they were not suppose to put stuff like that down the disposals. Mr. Hadley

CALLERS SIGNATURE Gene Pabst

210 E. Sunshine

Said that this would give him some things to check. I told him to be sure & call back if he had any other questions or if there was something else we could do for him.

CITY OF SPRINGFIELD
INTER-OFFICE MEMORANDUM

ATTENTION OF

DATE June 12, 1991

DEPARTMENT

RE: Heritage Cafeteria
210 E. Sunshine

On Wednesday, June 12, 1991, Gene Pabst and I inspected the grease interceptor at the Heritage Cafeteria at 210 E. Sunshine. The interceptor has apparently been working very well because there was a large accumulation of grease floating on top of the water. Gene and I talked to Jim Klinck, the manager of the cafeteria, about the interceptor. He said they had installed it about two months ago. We asked if they had ever cleaned it. Mr. Klinck said they hadn't yet. He went outside with us to look in it and said he would call someone to clean it.

Karen Chandler

SIGNED Karen Chandler
WPCI II
S & E

cc: Mr. Robert R. Schaefer, P.E., Superintendent of Sanitary Serviced
cc: Mr. Stephen A. Meyer, P.E., Sanitary Engineer
Mr. J. R. Lyman, Sewer Surveillance & Billing Supervisor

HERITAGE CAFETERIA
210 E. Sunshine

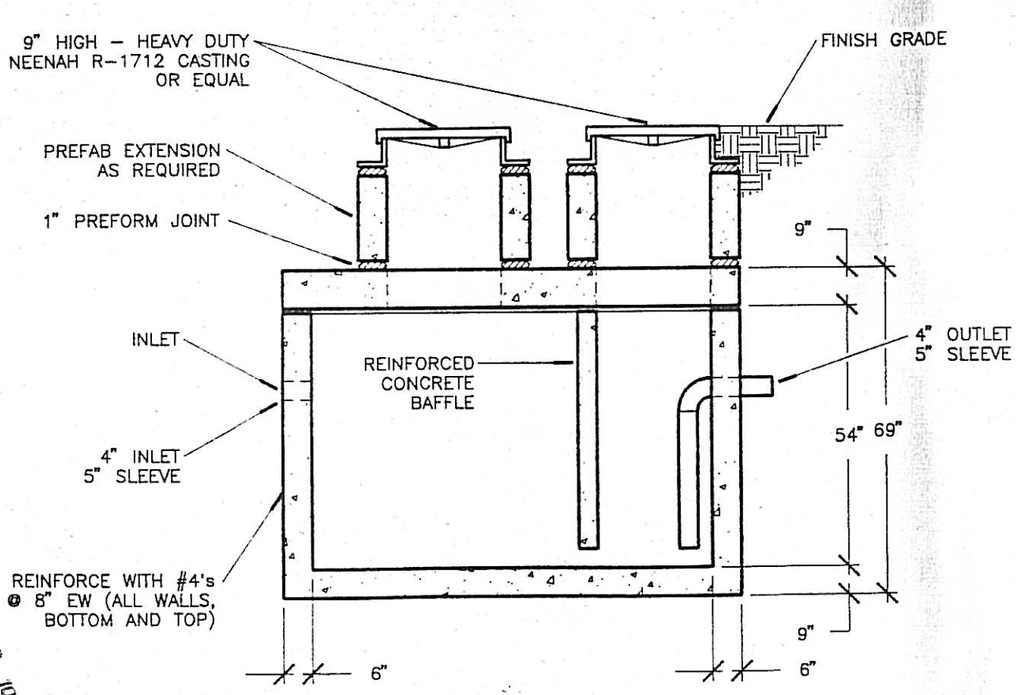

SECTION

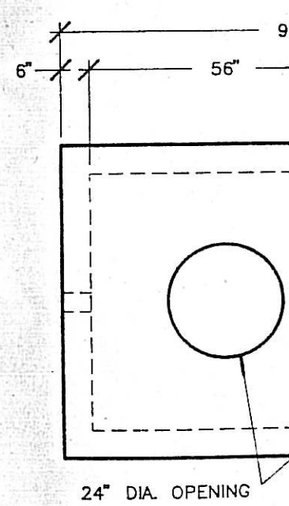

PLAN

210 E. Sunshine NORT

JAN 16 1991

1
M1

GREASE INTERCEPTOR DETAIL

NO SCALE

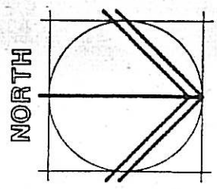

SITE PLAN

SCALE: 1"=20'-0"

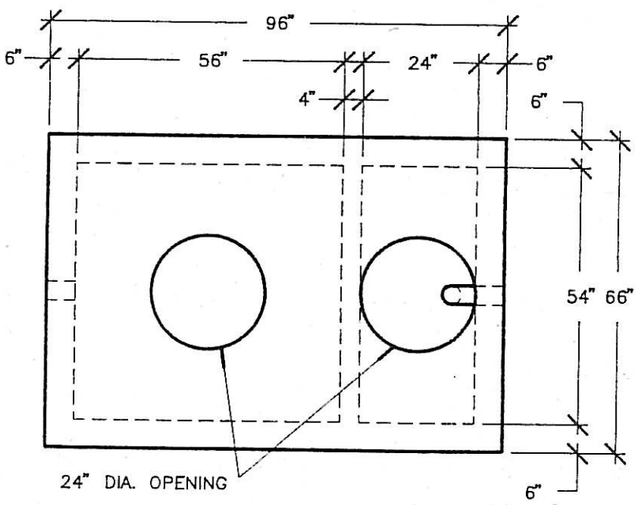

PLAN VIEW

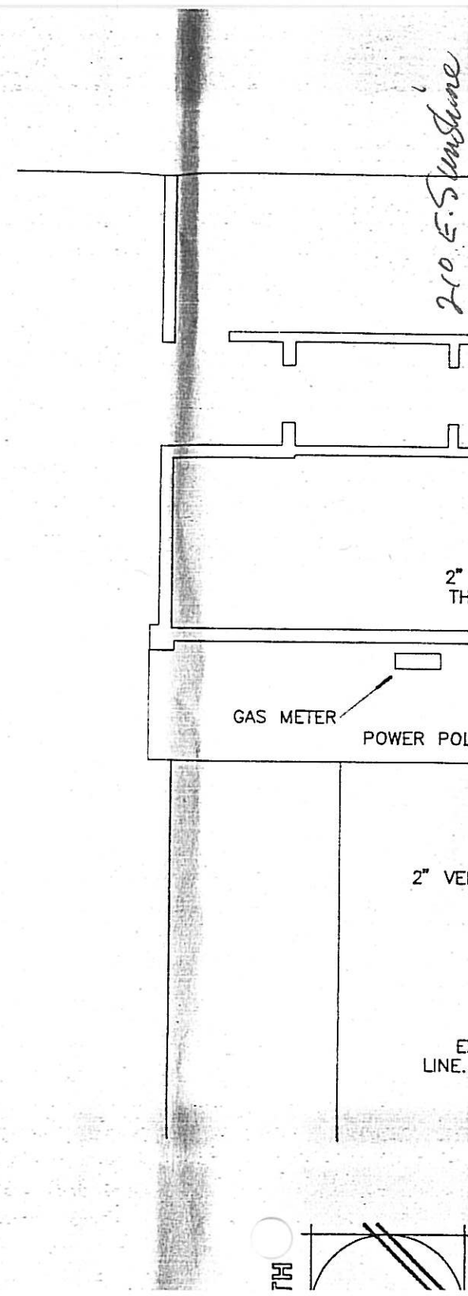

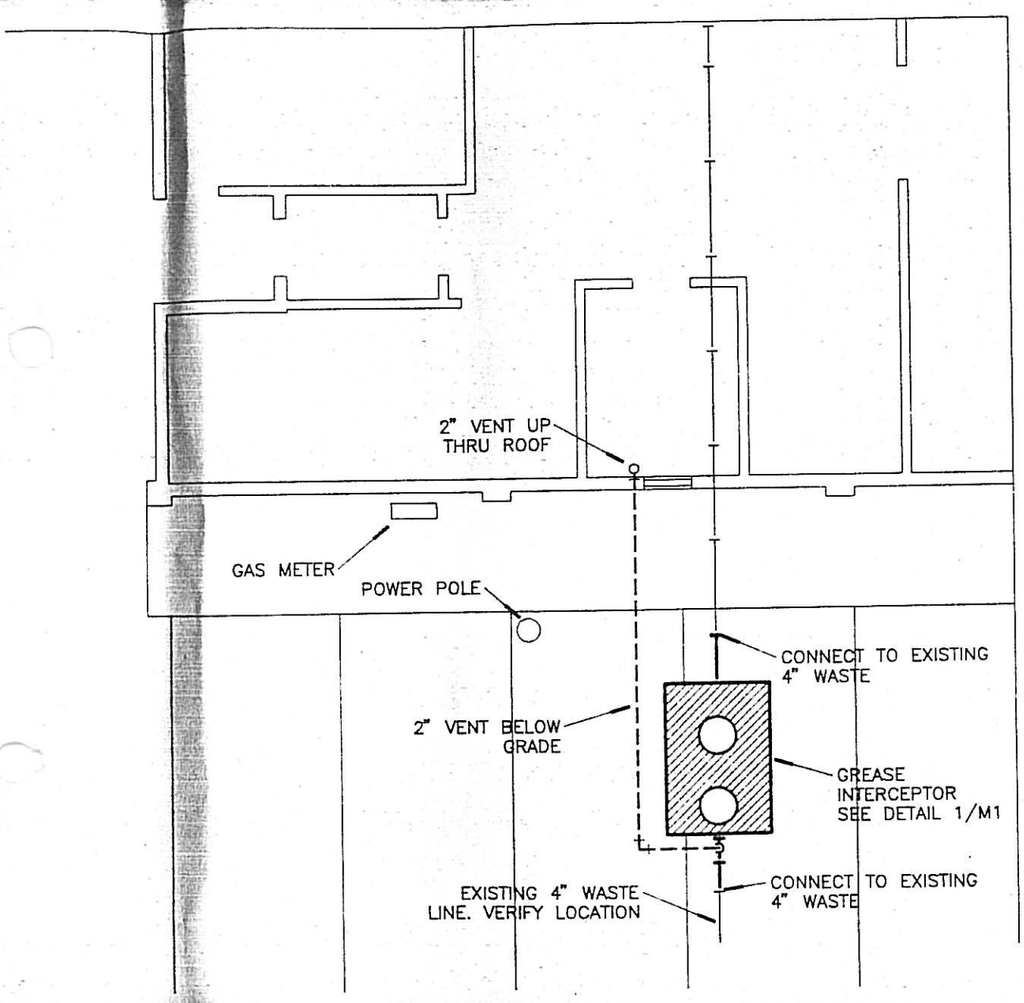

→ NORTH

NORTH

PLUMBING PLAN

SCALE: 1/8" = 1'-0"

#6913
1-9-91

210 E. Sundu

BUILDING REGULATIO

Comments: Yes____ No____
Approved:_____
SIGNED

STRUCTURAL ENGINE

Comments: Yes____ No____
Approved:_____
SIGNED

CITY UTILITIES

Comments: Yes____ No____
Approved:_____
SIGNED

COMMUNITY DEVELOPM

Comments: Yes____ No____
Approved:_____
SIGNED

FIRE DEPARTMENT

Comments: Yes____ No____
Approved:_____
SIGNED

HEALTH DEPARTMEN

Comments: Yes____ No____
Approved:_____
SIGNED

PUBLIC WORKS

Sanitary Services: Comments: Yes
Approved: [illegible]
SIGNED

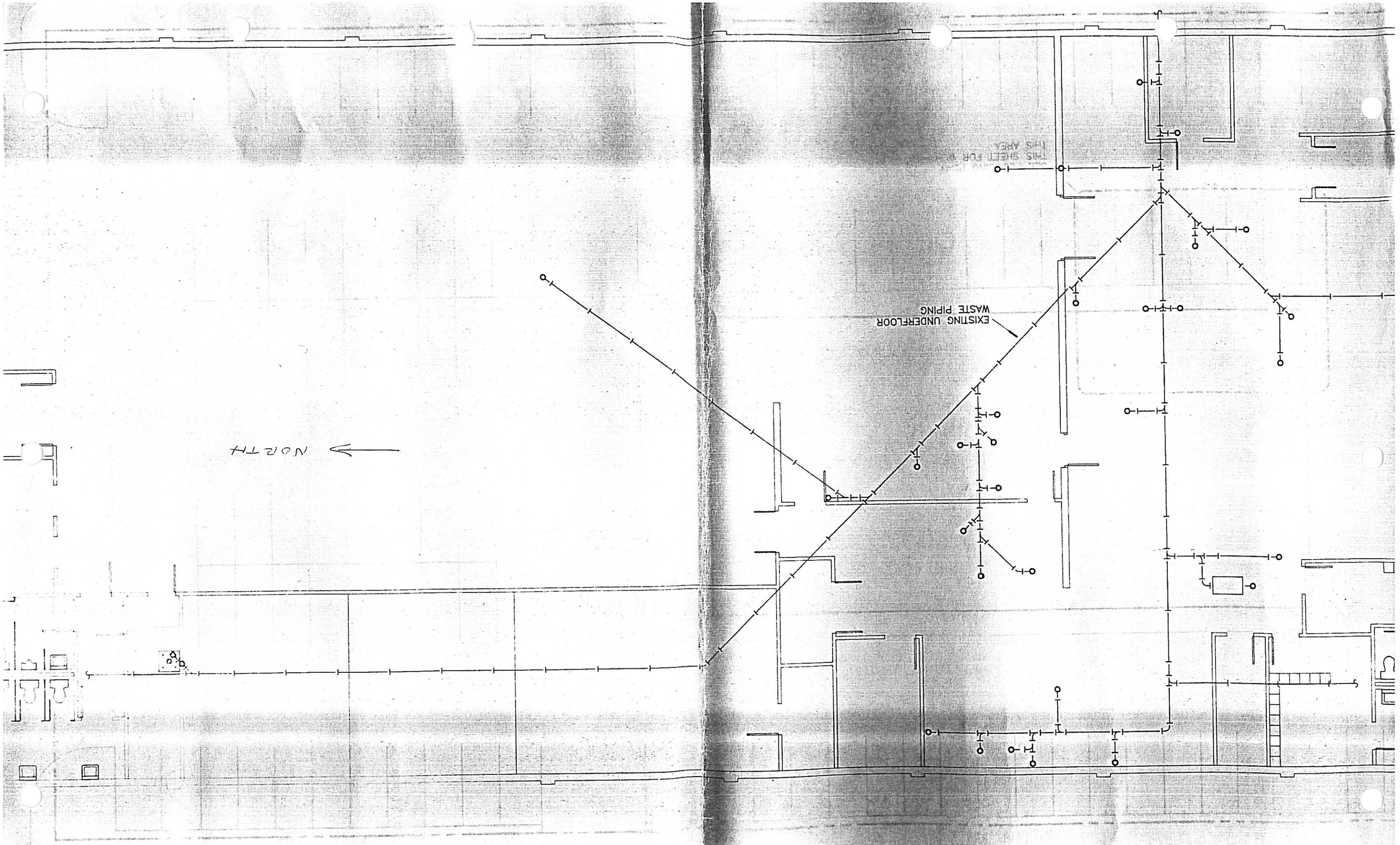

210 E. Sunshine

MEMO TO FILE

RE: Heritage Cafeteria
210 E. Sunshine

Friday, November 30, 1990, I called Jim Klinck, the manager of the Heritage Cafeteria on E. Sunshine, about their progress on the grease interceptor they are going to install outside. He said that Don Evans, at the Heritage Cafeteria on Battlefield and Fremont, was handling the project. I called, but was told he was on vacation until Friday, December 14, 1990.

On Tuesday, December 18, 1990, I talked to Don Evans about the grease interceptor. He said Mike Smith of Ward Plumbing had submitted a blueprint to Building Regulations, but it didn't have everything on it so he had to redo it. Mr. Evans said they would begin on the project as soon as that was taken care of.

Karen Chandler

Karen Chandler
WPCI II
S & E

210 E. Sunshine

LAW OFFICES OF
MANN, WALTER, WEATHERS & WALTER
SUITE 810 LANDERS BUILDING
SPRINGFIELD, MISSOURI 65806

EDGAR P. MANN (1858-1953)
FRANK C. MANN (1888-1971)
C. WALLACE WALTER
BUELL F. WEATHERS
KENNETH T. WALTER
CLYDE A. BUTTS
RICHARD E. DORR

TELEPHONE 862-7037
AREA CODE 417

July 30, 1976

Re: Heritage Cafeteria
210 East Sunshine Street

Mr. J. Randall Lyman
Water Pollution Control Inspector III
City Hall
830 Boonville Avenue
Springfield, MO 65802

Dear Mr. Lyman:

Your letter of July 22, 1976, addressed to Mr. R. D. Evans, President, Heritage Cafeteria, was referred to me by Mr. Evans. As I explained to you in our recent telephone conversation, the complaint involving a pollutant discharge arose out of an isolated and accidental incident as hereinafter explained.

I reviewed this matter with Mr. Evans who informs me that on Monday morning, July 19, 1976, the trash pick-up service that handles trash daily for both of the Heritage Cafeterias, picked up the usual container full of liquid and paper trash from the rear lot of the cafeteria located at the corner of Sunshine and Robberson. Mr. Evans later learned that the servicemen apparently left the plug out of the truck so that some of the liquid poured out onto the rear parking lot. This was cleaned up promptly and later the parking lot was washed down. Mr. Bob Gregory of the Health Department came to the cafeteria on July 21 or 22, after having received some complaint from a neighbor, and the employees of the Heritage Cafeteria rewashed the parking lot with water and bleach.

The Heritage Cafeterias have been in operation approximately eleven years. We are informed that throughout the entire period of their operation there have only been two incidents of this nature which have occurred. The first incident, which was approximately two years ago, was of little consequence and the premises were cleaned up promptly. The second incident is the one which is the subject of the complaint referred to in your letter of July 22, 1976.

FILE: HERITAGE CAFETERIA 210 E. Sunshine

The Heritage Cafeterias are operated on a very high level of cleanliness and constant attention is given to the maintenance of the high standards set by Mr. Evans and his associates for the conduct of their business and the maintenance of their premises. Unfortunately, the incident of July 19, 1976, over which the Heritage Cafeteria had no control, resulted in a regrettable temporary condition which was attended to promptly.

In view of the circumstances, we do not believe that the Heritage Cafeterias should be called upon to incur the very substantial cost of installing a drain in the parking lot and covering it with a roof, which was suggested by someone from your department. If our client were conducting its business in a manner that resulted in pollutant discharges from its properties then this would be a matter of real concern and should be corrected. We do not believe this to be the case, as explained above, and we would, therefore, ask that no requirement be made by way of the installation of a waste treatment system. Mr. Evans and his associates will, of course, continue to be attentive to the manner in which the trash is handled from their eating establishments, and I am of the opinion that you will receive no further complaints.

Thank you for your courteous assistance.

Sincerely yours,

MANN, WALTER, WEATHERS & WALTER

By C. Wallace Walter

CWW/ts

cc: Mr. John R. Nixon, Regional Administrator, Dept. of Natural Resources
Mr. Jack Newman, Director, Health Department
Mr. R. Nichols, Director, Building Regulations
Mr. R. D. Evans

July 22, 1976

Mr. R. D. Evans, President
Heritage Cafeteria
210 E. Sunshine Street
Springfield, Missouri 65804

Dear Mr. Evans:

After receiving a complaint, personnel from the City Water Pollution Control Section made a visual inspection of your property as of the above date. That inspection revealed that a pollutant discharge was occuring from that property, apparently from a cleanup operation at the rear door and around a trash container. Please be advised that such a discharge is in violation of City, State, and Federal Water Pollution Laws and that these laws contain severe penalties for unlawful discharge of water contaminants.

This office would advise you to cease discharge immediately, and to dispose of such wastewater in a proper waste treatment system. Please contact the Department of Building Regulations at City Hall to determine what permits are necessary to implement the required changes. Please contact this office when the changes are complete so that an inspection can be made to determine compliance.

If you need further assistance or have any questions, please do not hesitate to call.

Yours truly,

J. Randall Lyman
Water Pollution Control Inspector III
Surveillance & Enforcement

JRL:mh

cc: Mr. John R. Nixon, Regional Administrator, Department of Natural Resources
Mr. Jack Newman, Director, Health Department
Mr. R. Nichols, Director, Building Regulations
Public Works File

210 E. Sunshine - Heritage

SENDER: Complete items 1 and 2 when additional services are desired, and complete items 3 and 4.

Put your address in the "RETURN TO" Space on the reverse side. Failure to do this will prevent this card from being returned to you. The return receipt fee will provide you the name of the person delivered to and the date of delivery. For additional fees the following services are available. Consult postmaster for fees and check box(es) for additional service(s) requested.

1. ☐ Show to whom delivered, date, and addressee's address. *(Extra charge)*
2. ☐ Restricted Delivery *(Extra charge)*

3. Article Addressed to:
mr. Jim Klinck
Heritage Cafeteria
210 E. Sunshine
Springfield, MO 65804

4. Article Number
P 331 285 296

Type of Service:
☐ Registered ☐ Insured
☑ Certified ☐ COD
☐ Express Mail ☐ Return Receipt for Merchandise

Always obtain signature of addressee or agent and DATE DELIVERED.

5. Signature – Addressee
X

6. Signature – Agent
X [signature]

7. Date of Delivery
SEP 14 1990

8. Addressee's Address *(ONLY if requested)*
ADVISE CORRESPONDENCE OF CORRECT ZIP CODE
SEP 17 1990 65807

PS Form 3811, Apr. 1989 DOMESTIC RETURN RECEIPT

PS Form 3800, June 1985 ☆U.S.G.P.O. 1989-234-555

P 331 285 296

RECEIPT FOR CERTIFIED MAIL
NO INSURANCE COVERAGE PROVIDED
NOT FOR INTERNATIONAL MAIL
(See Reverse)

Sent to Jim Klinck	
Street and No. Heritage Cafeteria	
P.O., State and ZIP Code 210 E. Sunshine	
Postage 65804	$
Certified Fee	
Special Delivery Fee	
Restricted Delivery Fee	
Return Receipt showing to whom and Date Delivered	
Return Receipt showing to whom, Date, and Address of Delivery	
TOTAL Postage and Fees	$
Postmark or Date	

CITY of SPRINGFIELD

September 12, 1990

Mr. Jim Klinck
Heritage Cafeteria
210 E. Sunshine
Springfield, MO 65804

OFFICIAL NOTICE OF VIOLATION
Chapter 30-23(7): Restricted Discharges

Certified No. P 331 285 296

Dear Mr. Klinck:

As you know, the City of Springfield has experienced oil and grease problems in the sewer line serving your restaurant. As a result of this problem, City personnel have been sampling the sanitary sewer waste from Heritage Cafeteria in order to determine the amount of oil and grease in your sanitary discharge. The results of these samples for oil and grease are as follows: August 16, 1990-71.8 mg/l; August 21, 1990-275 mg/l; August 22, 1990-92.7 mg/l; and August 24, 1990-217 mg/l. The limit for the discharge of oil and grease to the sanitary sewer is 100 mg/l (milligrams per liter).

Your response to the official notice of violation that you received in May concerning this problem was to make changes in-house to control the amount of oil and grease in Heritage's discharge to the sanitary sewer. It appears, however, that these changes have been only partially effective in controlling this problem. Due to the failure of the housekeeping changes to achieve continued compliance with discharge limitations, your restaurant shall implement the following:

1. Within 30 days from the date of this letter, you shall develop plans to pretreat your sanitary sewer discharge to comply with the 100 milligrams per liter oil and grease limit. If not on staff, this office strongly recommends you consult a professional engineer to achieve compliance with discharge limitations. Plans shall be submitted to, and appropriate permits shall be obtained from the Springfield Building Regulations Department.

210 E. Sunshine

Department of Public Works 830 Boonville Springfield, Missouri 65802 (417) 864-1900

2. Within 90 days from the date of this letter, you shall have installed and be operating suitable pretreatment technology to achieve compliance with the 100 milligrams per liter oil and grease limit.

If you have any questions, please do not hesitate to contact this office at 864-1924.

Yours truly,

Karen Chandler

Karen Chandler
Water Pollution Control Inspector
Surveillance and Enforcement

KC/jb

cc: Robert Schaefer, P.E., Supt. of Sanitary Services
Randy Lyman, Sewer Surveillance and Billing Supervisor
Sanitary Engineer
Joe Harmon, Health Department
Harvey Cooper, Building Regulations
File

210 E. Sunshine

SOUTHWEST WASTEWATER PLANT LABORATORY, SPRINGFIELD, MISSOURI

ANALYSIS DATA REPORT

SAMPLE NUMBER: 5660
SAMPLE NAME: HERITAGE CAFETERIA
DATE OF SAMPLE: 08/24/90
DATE SUBMITTED: 08/24/90
TIME SUBMITTED: 15:21:47
SAMPLE TYPE: GRAB
SUBMITTED BY: CHANDLER
SET UP BY:
REMOVED BY:

TIME SAMPLER IN: 13:40:00
TIME SAMPLER OUT:
METER START:
METER END:
TEMP. DEG/C:
DIS. OXY. MG/L:
FLOW: MGD:
VOLUME:
DEPTH:

COMMENTS:

CONVENTIONAL PARAMETERS			TOTAL METALS UG/L	DISSOLVED METALS UG/L	TOTAL RECOVERABLE METALS UG/L
BOD-5	MG/L:		CU:		
PH	STD. UNITS:		CR:		
NFR	MG/L:		ZN:		
COD	MG/L:		CD:		
TOC	MG/L:		PB:		
NH3-N	MG/L:		NI:		
NO3-N	MG/L:		AG:		
NO2-N	MG/L:		FE:		
NO3+NO2-N	MG/L:		MG:		
CHLORIDE	MG/L:		MN:		
SULFATE	MG/L:		BA:		
TKN	MG/L:		SE:		
O-PO4-P	MG/L:		AS:		
O-PO4-P DIS	MG/L:		AL:		
TP	MG/L:		SB:		
CN TOTAL	UG/L:		B :		
CN AMMENA	MG/L:		CO:		
TDS	MG/L:		TI:		
PHENOLICS	UG/L:		CR+6:		
OIL&GREASE	MG/L:	217	BE:		
MBAS	MG/L:		TL:		
TURBIDITY	NTU:		K :		
CONDUCT	UMOS/CM:		NA:		
TOTAL COLI/100ML:					
FECAL COLI/100ML:					
FECA STREP/100ML:					

SEP 11 1990

210 E. Sunshine

CITY OF SPRINGFIELD
WATER POLLUTION CONTROL
MONITORING AND ANALYSES REPORT

SAMPLE NUMBER: 5660
SAMPLE NAME: HERITAGE CAFETERIA
DATE OF SAMPLE: 8-24-90
DATE SUBMITTED: ___/___/___
TIME SUBMITTED: ___:___:___
SAMPLE TYPE: GRAB
SUBMITTED BY:
SET UP BY: K CHANDLER
REMOVED BY:

TIME SAMPLER IN: 1:40 PM
TIME SAMPLER OUT: ___:___:___
METER START:
METER END:
TEMP. DEG/C:
DIS. OXY. MG/L:
FLOW:
VOLUME:
DEPTH:

COMMENTS:

CONVENTIONAL PARAMETERS			METALS ANALYSES TOTAL	DISLV	RECOV	OTHER PARAMETERS
BOD-5	MG/L:	CU				
PH STD.	UNITS:	CR				VOLATILE ORGANICS
NFR	MG/L:	ZN				BASE NEUTRALS
COD	MG/L:	CD				ACID EXTRACTIBLES
TOC	MG/L:	PB				PESTICIDES
NH3-N	MG/L:	NI				T.C.D.D.
NO3-N	MG/L:	AG				ASBESTOS
NO2-N	MG/L:	FE				TOTAL P.P.
NO3+NO2-N	MG/L:	HG				I.C.R.T.
CHLORIDE	MG/L:	MN				T.C.L.P.
SULFATE	MG/L:	BA				
TKN	MG/L:	SE				
O-PO4-P	MG/L:	AS				
O-PO4-P D	MG/L:	AL				
TP	MG/L:	SB				
CN TOTAL	UG/L:	B				
CN AMENBL	MG/L:	CO				
TDS	MG/L:	TI				
PHENOLICS	UG/L:	CR+6				
OIL&GREAS	MG/L: ✓	BE				
MBAS	MG/L:	TL				
TURBIDITY	NTUS:	K				
CONDCT	UMOS/CM:	NA				
TOT COLI/100ML:						
FEC COLI/100ML:						
FEC STRP/100ML:						

CHAIN OF CUSTODY RECORD

RELINQUISHED BY	RECEIVED BY	DATE	TIME
K. Chandler SEALED [] SHIPPED []	K. Hightfill SEALED []	8/24/90	1:55 pm
SEALED [] SHIPPED []	SEALED []		
SEALED [] SHIPPED []	SEALED []		SEP 11 1990

210 E. Sunshine

SOUTHWEST WASTEWATER PLANT LABORATORY, SPRINGFIELD, MISSOURI

ANALYSIS DATA REPORT

SAMPLE NUMBER: 5657
SAMPLE NAME: HERITAGE CAFETERIA
DATE OF SAMPLE: 08/22/90
DATE SUBMITTED: 08/22/90
TIME SUBMITTED: 14:26:43
SAMPLE TYPE: GRAB
SUBMITTED BY: CHANDLER
SET UP BY:
REMOVED BY:

TIME SAMPLER IN: 13:15:00
TIME SAMPLER OUT:
METER START:
METER END:
TEMP. DEG/C:
DIS. OXY. MG/L:
FLOW: MGD:
VOLUME:
DEPTH:

COMMENTS:

CONVENTIONAL PARAMETERS			TOTAL METALS UG/L	DISSOLVED METALS UG/L	TOTAL RECOVERABLE METALS UG/L
BOD-5	MG/L:	CU:			
PH STD.	UNITS:	CR:			
NFR	MG/L:	ZN:			
COD	MG/L:	CD:			
TOC	MG/L:	PB:			
NH3-N	MG/L:	NI:			
NO3-N	MG/L:	AG:			
NO2-N	MG/L:	FE:			
NO3+NO2-N	MG/L:	HG:			
CHLORIDE	MG/L:	MN:			
SULFATE	MG/L:	BA:			
TKN	MG/L:	SE:			
O-PO4-P	MG/L:	AS:			
O-PO4-P DIS	MG/L:	AL:			
TP	MG/L:	SB:			
CN TOTAL	UG/L:	B :			
CN AMMENA	MG/L:	CO:			
TDS	MG/L:	TI:			
PHENOLICS	UG/L:	CR+6:			
OIL&GREASE	MG/L: 92.7	BE:			
MBAS	MG/L:	TL:			
TURBIDITY	NTU:	K :			
CONDUCT	UMOS/CM:	NA:			
TOTAL COLI/100ML:					
FECAL COLI/100ML:					
FECA STREP/100ML:					

SEP 0 5 1990

CITY OF SPRINGFIE
WATER POLLUTION CON..OL
MONITORING AND ANALYSES REPORT

SAMPLE NUMBER: 5657
SAMPLE NAME: HERITAGE CASTRIA
DATE OF SAMPLE: 8-22-90
DATE SUBMITTED: ____/____/____
TIME SUBMITTED: ____:____:____
SAMPLE TYPE: GRAB
SUBMITTED BY:
SET UP BY: K. CHANDLER
REMOVED BY:

TIME SAMPLER IN: 1:15 PM
TIME SAMPLER OUT: ____:____:____
METER START:
METER END:
TEMP. DEG/C:
DIS. OXY. MG/L:
FLOW:
VOLUME:
DEPTH:

COMMENTS:

CONVENTIONAL PARAMETERS		METALS ANALYSES	TOTAL	DISLV	RECOV	OTHER PARAMETERS
BOD-5	MG/L:	CU				
PH STD.	UNITS:	CR				VOLATILE ORGANICS
NFR	MG/L:	ZN				BASE NEUTRALS
COD	MG/L:	CD				ACID EXTRACTIBLES
TOC	MG/L:	PB				PESTICIDES
NH3-N	MG/L:	NI				T.C.D.D.
NO3-N	MG/L:	AG				ASBESTOS
NO2-N	MG/L:	FE				TOTAL P.P.
NO3+NO2-N	MG/L:	HG				I.C.R.T.
CHLORIDE	MG/L:	MN				T.C.L.P.
SULFATE	MG/L:	BA				
TKN	MG/L:	SE				
O-PO4-P	MG/L:	AS				
O-PO4-P D	MG/L:	AL				
TP	MG/L:	SB				
CN TOTAL	UG/L:	B				
CN AMENBL	MG/L:	CO				
TDS	MG/L:	TI				
PHENOLICS	UG/L:	CR+6				
OIL&GREAS	MG/L: ✓	BE				
MBAS	MG/L:	TL				
TURBIDITY	NTUS:	K				
CONDCT	UMOS/CM:	NA				
TOT COLI/100ML:						
FEC COLI/100ML:						
FEC STRP/100ML:						

CHAIN OF CUSTODY RECORD

RELINQUISHED BY	RECEIVED BY	DATE	TIME
K. Chandler SEALED [] SHIPPED []	Mark Smith SEALED []	8/22/90	2:05 pm
SEALED [] SHIPPED []	SEALED []		
SEALED [] SHIPPED []	SEALED []	SEP 0 5 1990	

210 E. Sunshine

SOUTHWEST WASTEWATER PLANT LABORATORY, SPRINGFIELD, MISSOURI

ANALYSIS DATA REPORT

SAMPLE NUMBER: 5651
SAMPLE NAME: HERITAGE CAFETERIA
DATE OF SAMPLE: 08/21/90
DATE SUBMITTED: 08/21/90
TIME SUBMITTED: 13:35:18
SAMPLE TYPE: COMPOSITE
SUBMITTED BY: CHANDLER
SET UP BY:
REMOVED BY:

TIME SAMPLER IN: 13:00:00
TIME SAMPLER OUT:
METER START:
METER END:
TEMP. DEG/C:
DIS. OXY. MG/L:
FLOW: MGD:
VOLUME:
DEPTH:

COMMENTS:

CONVENTIONAL PARAMETERS			TOTAL METALS UG/L	DISSOLVED METALS UG/L	TOTAL RECOVERABLE METALS UG/L
BOD-5	MG/L:		CU:		
PH	STD. UNITS:		CR:		
NFR	MG/L:		ZN:		
COD	MG/L:		CD:		
TOC	MG/L:		PB:		
NH3-N	MG/L:		NI:		
NO3-N	MG/L:		AG:		
NO2-N	MG/L:		FE:		
NO3+NO2-N	MG/L:		HG:		
CHLORIDE	MG/L:		MN:		
SULFATE	MG/L:		BA:		
TKN	MG/L:		SE:		
O-PO4-P	MG/L:		AS:		
O-PO4-P DIS	MG/L:		AL:		
TP	MG/L:		SB:		
CN TOTAL	UG/L:		B :		
CN AMMENA	MG/L:		CO:		
TDS	MG/L:		TI:		
PHENOLICS	UG/L:		CR+6:		
OIL&GREASE	MG/L:	275	BE:		
MBAS	MG/L:		TL:		
TURBIDITY	NTU:		K :		
CONDUCT	UMOS/CM:		NA:		
TOTAL COLI/100ML:					
FECAL COLI/100ML:					
FECA STREP/100ML:					

SEP 05 1990

210 E. Sunshine

CITY OF SPRINGFIE
WATER POLLUTION CON..OL
MONITORING AND ANALYSES REPORT

SAMPLE NUMBER: 5651
SAMPLE NAME: HERITAGE CREEK
DATE OF SAMPLE: 8-21-90
DATE SUBMITTED: ____/____/____
TIME SUBMITTED: ____:____:____
SAMPLE TYPE: 24 HR AUTOCOMP
SUBMITTED BY:
SET UP BY: K. CHANDLER
REMOVED BY:

TIME SAMPLER IN: 1:00 PM
TIME SAMPLER OUT: ____:____:____
METER START:
METER END:
TEMP. DEG/C:
DIS. OXY. MG/L:
FLOW:
VOLUME:
DEPTH:

COMMENTS:

CONVENTIONAL PARAMETERS		METALS ANALYSES TOTAL	DISLV	RECOV	OTHER PARAMETERS
BOD-5	MG/L:	CU			VOLATILE ORGANICS
PH STD.	UNITS:	CR			BASE NEUTRALS
NFR	MG/L:	ZN			ACID EXTRACTIBLES
COD	MG/L:	CD			PESTICIDES
TOC	MG/L:	PB			T.C.D.D.
NH3-N	MG/L:	NI			ASBESTOS
NO3-N	MG/L:	AG			TOTAL P.P.
NO2-N	MG/L:	FE			I.C.R.T.
NO3+NO2-N	MG/L:	HG			T.C.L.P.
CHLORIDE	MG/L:	MN			
SULFATE	MG/L:	BA			
TKN	MG/L:	SE			
O-PO4-P	MG/L:	AS			
O-PO4-P D	MG/L:	AL			
TP	MG/L:	SB			
CN TOTAL	UG/L:	B			
CN AMENBL	MG/L:	CO			
TDS	MG/L:	TI			
PHENOLICS	UG/L:	CR+6			
OIL&GREAS	MG/L: ✓	BE			
MBAS	MG/L:	TL			
TURBIDITY	NTUS:	K			
CONDCT	UMOS/CM:	NA			
TOT COLI/100ML:					
FEC COLI/100ML:					
FEC STRP/100ML:					

CHAIN OF CUSTODY RECORD

RELINQUISHED BY	RECEIVED BY	DATE	TIME
K. Chandler SEALED [] SHIPPED []	K. Hatfield SEALED []	8/21/90	1:15 pm
SEALED [] SHIPPED []	SEALED []		
SEALED [] SHIPPED []	SEALED []	SEP 05 1990	

210 E. Sunshine

SOUTHWEST WASTEWATER PLANT LABORATORY, SPRINGFIELD, MISSOURI

ANALYSIS DATA REPORT

SAMPLE NUMBER: 5649
SAMPLE NAME: HERITAGE CAFETERIA
DATE OF SAMPLE: 08/16/90
DATE SUBMITTED: 08/20/90
TIME SUBMITTED: 09:30:24
SAMPLE TYPE: GRAB
SUBMITTED BY: CHANDLER
SET UP BY:
REMOVED BY:

TIME SAMPLER IN: 13:35:00
TIME SAMPLER OUT:
METER START:
METER END:
TEMP. DEG/C:
DIS. OXY. MG/L:
FLOW: MGD:
VOLUME:
DEPTH:

COMMENTS:

CONVENTIONAL PARAMETERS				TOTAL METALS UG/L	DISSOLVED METALS UG/L	TOTAL RECOVERABLE METALS UG/L
BOD-5	MG/L:		CU:			
PH	STD. UNITS:		CR:			
NFR	MG/L:		ZN:			
COD	MG/L:		CD:			
TOC	MG/L:		PB:			
NH3-N	MG/L:		NI:			
NO3-N	MG/L:		AG:			
NO2-N	MG/L:		FE:			
NO3+NO2-N	MG/L:		HG:			
CHLORIDE	MG/L:		MN:			
SULFATE	MG/L:		BA:			
TKN	MG/L:		SE:			
O-PO4-P	MG/L:		AS:			
O-PO4-P DIS	MG/L:		AL:			
TP	MG/L:		SB:			
CN TOTAL	UG/L:		B :			
CN AMMENA	MG/L:		CO:			
TDS	MG/L:		TI:			
PHENOLICS	UG/L:		CR+6:			
OIL&GREASE	MG/L:	71.8	BE:			
MBAS	MG/L:		TL:			
TURBIDITY	NTU:		K :			
CONDUCT	UMOS/CM:		NA:			
TOTAL COLI/100ML:						
FECAL COLI/100ML:						
FECA STREP/100ML:						

SEP 05 1990

210 E. Sunshine

CITY OF SPRINGFIE
WATER POLLUTION CON.ROL
MONITORING AND ANALYSES REPORT

SAMPLE NUMBER: 5649
SAMPLE NAME: HERITAGE CAFETERIA
DATE OF SAMPLE: 8-16-90
DATE SUBMITTED: ____/____/____
TIME SUBMITTED: ____:____
SAMPLE TYPE: GRAB
SUBMITTED BY:
SET UP BY:
REMOVED BY: K. CHANDLER

TIME SAMPLER IN: 1:35 PM
TIME SAMPLER OUT: ____:____:____
METER START:
METER END:
TEMP. DEG/C:
DIS. OXY. MG/L:
FLOW:
VOLUME:
DEPTH:

COMMENTS:

CONVENTIONAL PARAMETERS		METALS ANALYSES TOTAL	DISLV	RECOV	OTHER PARAMETERS
BOD-5	MG/L:	CU			VOLATILE ORGANICS
PH STD.	UNITS:	CR			BASE NEUTRALS
NFR	MG/L:	ZN			ACID EXTRACTIBLES
COD	MG/L:	CD			PESTICIDES
TOC	MG/L:	PB			T.C.D.D.
NH3-N	MG/L:	NI			ASBESTOS
NO3-N	MG/L:	AG			TOTAL P.P.
NO2-N	MG/L:	FE			I.C.R.T.
NO3+NO2-N	MG/L:	HG			T.C.L.P.
CHLORIDE	MG/L:	MN			
SULFATE	MG/L:	BA			
TKN	MG/L:	SE			
O-PO4-P	MG/L:	AS			
O-PO4-P D	MG/L:	AL			
TP	MG/L:	SB			
CN TOTAL	UG/L:	B			
CN AMENBL	MG/L:	CO			
TDS	MG/L:	TI			
PHENOLICS	UG/L: ✓	CR+6			
OIL&GREAS	MG/L:	BE			
MBAS	MG/L:	TL			
TURBIDITY	NTUS:	K			
CONDCT	UMOS/CM:	NA			
TOT COLI/100ML:					
FEC COLI/100ML:					
FEC STRP/100ML:					

CHAIN OF CUSTODY RECORD

RELINQUISHED BY	RECEIVED BY	DATE	TIME
Karen Chandler SEALED [] SHIPPED []	SEALED []	8/16/90	1:50 PM
SEALED [] SHIPPED []	SEALED []		
SEALED [] SHIPPED []	SEALED []	SEP 05 1990	

210 E. Sunshine

JUN 15 1990

HERITAGE CAFETERIA

EVANS CAFETERIAS, INC.

FINE FOOD AND GRACIOUS DINING IS OUR PROUD HERITAGE

PHONE 883-1626
210 E. SUNSHINE
SPRINGFIELD, MISSOURI 65807

ATTN: GENE PABST

IN RESPONSE TO YOUR INQUIRY OF A GREASE PROBLEM AT THE HERITAGE, WE WANT YOU TO KNOW THAT WE HAVE CONSIDERABLY STEPPED UP OUR EFFORTS INSIDE THE CAFETERIA SINCE OUR MEETING. WE FEEL THE CHANGES WE'VE MADE SHOULD DRASTICALLY REDUCE THE AMOUNT OF GREASE EXITING THE BUILDING THROUGH THE SEWAGE. WE HAVE DONE SEVERAL THINGS WHICH WE FEEL WILL HELP AND I WOULD LIKE TO LIST THEM HERE FOR YOU TO REVIEW.

FIRST AN EDUCATIONAL MEETING WITH THE EMPLOYEES TO ALARM THEM OF THE PROBLEM AND POSSIBLE SOLUTIONS. THE BIGGEST PROBLEM AS WE SEE IT IS FOR THE COOKS TO BE MUCH MORE SELECTIVE IN WHAT IS PUT IN THE GARBAGE DISPOSALS AND DOWN THE SINKS. THEIR UNDERSTANDING OF THIS SHOULD MAKE A SIZEABLE DIFFERENCE.

210 E. Sunshine

JUN 15 1990

HERITAGE CAFETERIA

EVANS CAFETERIAS, INC.

FINE FOOD AND GRACIOUS DINING IS OUR PROUD HERITAGE

PHONE 883-1626
210 E. SUNSHINE
SPRINGFIELD, MISSOURI 65807

MORE THOROUGH SCRAPPING OF THE POTS AND PANS INTO THE BARREL CAN ELIMINATE A LOT OF GREASE.

AND THIRD, MORE FREQUENTLY CLEANING THE GREASE TRAP SHOULD MAKE A TREMENDOUS DIFFERENCE AS FAR AS THE DISHROOM IS CONCERNED.

WE FEEL THAT WE HAVE THE PROBLEM UNDER CONTROL AND CERTAINLY HOPE THAT YOU CAN PROVE THIS TO BE TRUE.

IF YOU NEED TO CONTACT US FEEL FREE TO DO SO. LET US KNOW IF YOU FIND THAT THE PROBLEM HAS NOT BEEN CORRECTED.

THANKS,

James W. Klink Robert S. Fender

210 E. Sunshine

May 21, 1990

Memo to File

Re: Heritage - E. Sunshine -
Meeting May 17, 1990, Oil
And Grease Problems.

Karen Chandler & I met with the Heritage Cafeteria's Manger (E. Sunshine) to discuss oil & grease problem. We talked about our sample results from May 1, 2 & 4, 1990. That two of the three were over the O & G limit. W Also to Mr. Jim Klinck that the City ha been experiencing backup problems. W told him that he would be receiving a letter telling him to address the problem.

Gene Pabst

210 E. Sunshine

CITY of SPRINGFIELD

May 25, 1990

Mr. Jim Klinck
Heritage Cafeteria
210 E. Sunshine
Springfield, MO 65804

OFFICIAL NOTICE OF VIOLATION
Chapter 30-23(7): Restricted Discharges

Dear Mr. Klinck:

As explained to you during our meeting on May 17, 1990, City personnel have been sampling the sanitary sewer waste from your restaurant to determine the amount of oil and grease in your discharge. The results of these samples for oil and grease are as follows: May 1, 1990 - 145 mg/L, May 2, 1990 - 142 mg/L and May 4, 1990 - 96.1 mg/L. The limit for discharge of oil and grease to the sanitary sewer is 100 mg/L (milligrams per liter).

The City is experiencing oil and grease accumulation problems in the sewer main serving your building. The City has cleaned several oil and grease stoppages in the sewer to which you are attached. These stoppages require added maintenance costs, sometimes results in sewage backing up into homes with subsequent damage claims, and subjects the City to violation provisions of state and federal water pollution laws.

The City has experienced a similar oil and grease problem in the past, with your restaurant. Please find the enclosed correspondence which relates to this problem. At that time (1986) a sampling manhole was installed and a number of changes were made in-house, as far as housekeeping, to control the oil and grease problem. Samples taken after this period proved the housekeeping changes to be effective.

Some time has passed since these changes were made and it again appears that the oil and grease problem has returned. Due to the apparent failure of the housekeeping changes to achieve continued compliance with discharge limitations, your restaurant shall implement the following:

210 E. Sunshine

Department of Public Works 830 Boonville Springfield, Missouri 65802 (417) 864-1900

1. Within 30 days from the date of this letter, you shall develop plans to pretreat your sanitary sewer discharge to comply with the 100 milligrams per liter oil and grease limit. If not on staff, this office strongly recommends you consult a professional engineer to achieve compliance with discharge limitations. Plans shall be submitted to, and appropriate permits shall be obtained from the Springfield Building Regulations Department.

2. Within 90 days from the date of this letter, you shall have installed and be operating suitable pretreatment technology to achieve compliance with the 100 milligrams per liter oil and grease limit.

If you have any questions please do not hesitate to contact this office at 8664-1924.

Yours truly,

Gene Pabst

Gene Pabst
Water Pollution Control Inspector
Surveillance and Enforcement

GP/jb

Enclosure

cc: Robert Schaefer, P.E., Superintendent of Sanitary Services
Randy Lyman, Sewer Surveillance and Billing Supervisor
Joe Harmon, Health Department
Harvey Cooper, Building Regulations
File

210 E. Sunshine

SOUTHWEST WASTEWATER PLANT LABORATORY, SPRINGFIELD, MISSOURI

ANALYSIS DATA REPORT

SAMPLE NUMBER: 5366
SAMPLE NAME: HERITAGE
DATE OF SAMPLE: 05/01/90
DATE SUBMITTED: 05/02/90
TIME SUBMITTED: 09:49:48
SAMPLE TYPE: GRAB
SUBMITTED BY: PABST & CHANDLER
SET UP BY:
REMOVED BY:

TIME SAMPLER IN: 13:05:00
TIME SAMPLER OUT:
METER START:
METER END:
TEMP. DEG/C:
DIS. OXY. MG/L:
FLOW: MGD:
VOLUME:
DEPTH:

COMMENTS:EAST SUNSHINE.

CONVENTIONAL PARAMETERS			TOTAL METALS UG/L	DISSOLVED METALS UG/L	TOTAL RECOVERABLE METALS UG/L
BOD-5	MG/L:		CU:		
PH	STD. UNITS:		CR:		
NFR	MG/L:		ZN:		
COD	MG/L:		CD:		
TOC	MG/L:		PB:		
NH3-N	MG/L:		NI:		
NO3-N	MG/L:		AG:		
NO2-N	MG/L:		FE:		
NO3+NO2-N	MG/L:		HG:		
CHLORIDE	MG/L:		MN:		
SULFATE	MG/L:		BA:		
TKN	MG/L:		SE:		
O-PO4-P	MG/L:		AS:		
O-PO4-P DIS	MG/L:		AL:		
TP	MG/L:		SB:		
CN TOTAL	UG/L:		B :		
CN AMMENA	MG/L:		CO:		
TDS	MG/L:		TI:		
PHENOLICS	UG/L:		CR+6:		
OIL&GREASE	MG/L:	145	BE:		
MBAS	MG/L:		TL:		
TURBIDITY	NTU:		K :		
CONDUCT	UMOS/CM:		NA:		
TOTAL COLI/100ML:					
FECAL COLI/100ML:					
FECA STREP/100ML:					

MAY 16 1990

210 E. Sunshine

SOUTHWEST WASTEWATER PLANT LABORATORY, SPRINGFIELD, MISSOURI

ANALYSIS DATA REPORT

SAMPLE NUMBER:	5368	TIME SAMPLER IN:	13:05:00
SAMPLE NAME:	HERITAGE	TIME SAMPLER OUT:	
DATE OF SAMPLE:	05/02/90	METER START:	
DATE SUBMITTED:	05/02/90	METER END:	
TIME SUBMITTED:	13:36:54	TEMP. DEG/C:	
SAMPLE TYPE:	GRAB	DIS. OXY. MG/L:	
SUBMITTED BY:	CHANDLER	FLOW: MGD:	
SET UP BY:		VOLUME:	
REMOVED BY:		DEPTH:	

COMMENTS:EAST SUNSHINE.

CONVENTIONAL PARAMETERS			TOTAL METALS UG/L	DISSOLVED METALS UG/L	TOTAL RECOVERABLE METALS UG/L
BOD-5	MG/L:	CU:			
PH	STD. UNITS:	CR:			
NFR	MG/L:	ZN:			
COD	MG/L:	CD:			
TOC	MG/L:	PB:			
NH3-N	MG/L:	NI:			
NO3-N	MG/L:	AG:			
NO2-N	MG/L:	FE:			
NO3+NO2-N	MG/L:	HG:			
CHLORIDE	MG/L:	MN:			
SULFATE	MG/L:	BA:			
TKN	MG/L:	SE:			
O-PO4-P	MG/L:	AS:			
O-PO4-P DIS	MG/L:	AL:			
TP	MG/L:	SB:			
CN TOTAL	UG/L:	B :			
CN AMMENA	MG/L:	CO:			
TDS	MG/L:	TI:			
PHENOLICS	UG/L:	CR+6:			
OIL&GREASE	MG/L: 142	BE:			
MBAS	MG/L:	TL:			
TURBIDITY	NTU:	K :			
CONDUCT	UMOS/CM:	NA:			
TOTAL COLI/100ML:					
FECAL COLI/100ML:					
FECA STREP/100ML:					

MAY 16 1990

210 E. Sunshine

SOUTHWEST WASTEWATER PLANT LABORATORY, SPRINGFIELD, MISSOURI

ANALYSIS DATA REPORT

SAMPLE NUMBER: 5369
SAMPLE NAME: HERITAGE-E. SUNSHINE
DATE OF SAMPLE: 05/04/90
DATE SUBMITTED: 05/04/90
TIME SUBMITTED: 13:48:14
SAMPLE TYPE: GRAB
SUBMITTED BY: PABST
SET UP BY:
REMOVED BY:

TIME SAMPLER IN: 12:55:00
TIME SAMPLER OUT:
METER START:
METER END:
TEMP. DEG/C:
DIS. OXY. MG/L:
FLOW: MGD:
VOLUME:
DEPTH:

COMMENTS:

CONVENTIONAL PARAMETERS				TOTAL METALS UG/L	DISSOLVED METALS UG/L	TOTAL RECOVERABLE METALS UG/L
BOD-5	MG/L:		CU:			
PH STD.	UNITS:		CR:			
NFR	MG/L:		ZN:			
COD	MG/L:		CD:			
TOC	MG/L:		PB:			
NH3-N	MG/L:		NI:			
NO3-N	MG/L:		AG:			
NO2-N	MG/L:		FE:			
NO3+NO2-N	MG/L:		HG:			
CHLORIDE	MG/L:		MN:			
SULFATE	MG/L:		BA:			
TKN	MG/L:		SE:			
O-PO4-P	MG/L:		AS:			
O-PO4-P DIS	MG/L:		AL:			
TP	MG/L:		SB:			
CN TOTAL	UG/L:		B :			
CN AMMENA	MG/L:		CO:			
TDS	MG/L:		TI:			
PHENOLICS	UG/L:		CR+6:			
OIL&GREASE	MG/L:	96.1	BE:			
MBAS	MG/L:		TL:			
TURBIDITY	NTU:		K :			
CONDUCT	UMOS/CM:		NA:			
TOTAL COLI/100ML:						
FECAL COLI/100ML:						
FECA STREP/100ML:						

MAY 16 1990

200 E. Sunshine

CITY OF SPRINGFIELD
WATER POLLUTION CONTROL
MONITORING AND ANALYSES REPORT

SAMPLE NUMBER: 5369
SAMPLE NAME: Heritage - E. Sunshine
DATE OF SAMPLE: 5-4-90
DATE SUBMITTED: ___/___/___
TIME SUBMITTED: ___:___:___
SAMPLE TYPE: GRAB
SUBMITTED BY: Pabst
SET UP BY:
REMOVED BY:

TIME SAMPLER IN: 12:55 P.M.
TIME SAMPLER OUT: ___:___:___
METER START:
METER END:
TEMP. DEG/C:
DIS. OXY. MG/L:
FLOW:
VOLUME:
DEPTH:

COMMENTS:

CONVENTIONAL PARAMETERS		METALS ANALYSES	TOTAL	DISLV	RECOV	OTHER PARAMETERS
BOD-5	MG/L:	CU				VOLATILE ORGANICS
PH STD.	UNITS:	CR				BASE NEUTRALS
NFR	MG/L:	ZN				ACID EXTRACTIBLES
COD	MG/L:	CD				PESTICIDES
TOC	MG/L:	PB				T.C.D.D.
NH3-N	MG/L:	NI				ASBESTOS
NO3-N	MG/L:	AG				TOTAL P.P.
NO2-N	MG/L:	FE				I.C.R.T.
NO3+NO2-N	MG/L:	HG				T.C.L.P.
CHLORIDE	MG/L:	MN				
SULFATE	MG/L:	BA				
TKN	MG/L:	SE				
O-PO4-P	MG/L:	AS				
O-PO4-P D	MG/L:	AL				
TP	MG/L:	SB				
CN TOTAL	UG/L:	B				
CN AMENBL	MG/L:	CO				
TDS	MG/L:	TI				
PHENOLICS	UG/L:	CR+6				
OIL&GREAS	MG/L: X	BE				
MBAS	MG/L:	TL				
TURBIDITY	NTUS:	K				
CONDCT	UMOS/CM:	NA				
TOT COLI/100ML:						
FEC COLI/100ML:						
FEC STRP/100ML:						

CHAIN OF CUSTODY RECORD

RELINQUISHED BY	RECEIVED BY	DATE	TIME
Gene Pabst SEALED [] SHIPPED []	Marie Smith SEALED []	5-4-90	1:15 P.M.
SEALED [] SHIPPED []	SEALED []		
SEALED [] SHIPPED []	SEALED []		

MAY 16 1990

210 E. Sunshine

INDUSTRIAL WASTE
MONITORING AND ANALYSES REPORT

"Sunshine"

Source HERITAGE CAFETERIA SIC _____ Sample Number 2512

Set Up By JRL + SDS Date 5/29/86 Time 1:50 AM

Removed by _____ Date _____ Time _____

Flow _____ Meter Start _____ Meter Ending _____

Method GRAB (E. MANHOLE) Entered in billing file _____ by _____

✓	Test	Results	Lbs./ccf	✓	Test	Results	Lbs./ccf
	Total SS				Cu		
	pH				Fe		
	BOD_5				Zn		
	C.O.D.				Cd		
	Organic Carbon				Pb		
	NH_3-N				Hg		
	Nitrate				Ni		
	T.K.N.				Cr, T		
	O-PO_4-P				Mn		
	T.P.				Ba		
	CN-A				Ag		
	CN-T				Se		
	T.D. Solids				As		
	Phenol				Al		
✓	Oil & Grease				Sb		
	Nitrite				B		
	M.B.A.S.				Cr, 6+		
	Temperature				Co		
	T.T.O.				F		
					Ti		
					Br		

Chain of Custody Record

Relinquished By	Received By	Date	Time
[signature] ☐ Sealed ☐ Shipped	Brown ☐ Sealed	5/29/86	3:00 pm
Relinquished By ☐ Sealed ☐ Shipped	Received By ☐ Sealed		
Relinquished By ☐ Sealed ☐ Shipped	Received By ☐ Sealed		
Relinquished By ☐ Sealed ☐ Shipped	Received By ☐ Sealed		

REMARKS:
HCL
GLASS

210 E. Sunshine

March 10, 1986

Mr. Gene McCall, General Manager
Heritage Cafeteria
210 East Sunshine
Springfield, Missouri 65804

Dear Mr. McCall:

This letter will confirm our conversations at your business during the current week. It does appear the increased cleaning of the grease interceptor will help our oil and grease accumulation problems in the sanitary sewer. Any grease removed from the establishment will be that much less to cause stoppages in the sanitary sewer.

To achieve the design removal efficiencies the 5125 interceptor installed in your food preparation area should be installed to manufacturer's requirements. Basically this will involve reversing the floor interceptor so the sinks will enter the inlet side instead of the outlet and install flow control devices on the two sinks tributary to the interceptor. You may also want to review the total volume of the two sinks connected to the grease interceptor to determine if the interceptor is properly sized. This office did talk to the grease interceptor manufacturer to determine the above requirements.

This office has talked to your plumber, Mr. Herb Reed, about the sampling manhole. It is permissible to install the sampling manhole in the grass area between the street curb and your property line. You will need to get the proper permit from city hall before excavation is started. Sewer Maintenance crews will mark the approximate wye location where your building connects to the sanitary sewer.

Due to the sanitary sewer problems the city has experienced the Heritage Cafeteria will be placed on routine sampling and analysis for oil and grease. Monitoring of your discharge will be conducted by this office. The oil and grease limit for discharge is 100 mg/l.

210 E. Sunshine

If you have any questions please do not hesitate to contact this office at 864-1924.

Yours truly,

Stephen D. Short

Stephen D. Short
Water Pollution Control Inspector II
Surveillance & Enforcement

SDS:js

cc: Robert R. Schaefer, P.E., Superintendent of Sanitary Services
Henry M. Cole, P.E., Sanitary Engineer
Joe Harmon, Health Department
File (2)

210 E. Sunshine

We wish to express our appreciation for the courtesy extended by Mr. Rob Fender on February 20, 1986. If you have any questions or we may be of any service, please do not hesitate to contact us at 864-1924.

Yours truly,

J. Randall Lyman

J. Randall Lyman
Water Pollution Control Inspector III
Surveillance and Enforcement

JRL:js

Enclosure

cc: Robert R. Schaefer, Superintendent of Sanitary Services
Henry H. Cole, Sanitary Engineer
Cory Smith, Building Regulations
Wayne Latimer, Sewer Maintenance
Bob Gregory, Health Dept.
File (2)

210 E. Sunshine

File

November 3, 1980

Heritage Cafeteria
Mr. David Foster, Manager
1364 E. Battlefield
Springfield, Missouri 65804

Dear Mr. Foster:

During the last month City Sewer Maintenance crews have responded to sewer stoppages in the City sewer line serving the above address and at the Heritage Cafeteria at 210 E. Sunshine. In both instances the stoppage was caused by what appeared to be pieces of chicken bones.

Article I. Section 30-1, defines "Properly Shredded Garbage". "Garbage which has been shredded to such a degree that all particles will be carried freely under the flow conditions normally prevailing in sewers, with no particle greater than one-half inch in any dimension."

In each instance it appeared that the material causing the stoppage did not meet the definition of "Properly Shredded Garbage". This office feels that the best solution to this problem is to place such material in an acceptable trash receptacle. Mr. Bob Gregory of the Food Inspection Section, City Health Department, indicated that this would be acceptable in relation to their regulations.

Personnel from this office maintain routine surveillance of City sewer lines looking for the causes of unusual stoppages involving substances such as bones, grease and other solids which may interfere with normal flow of the Sanitary Sewer. When repeated stoppages can be attributed to the same source, it is the policy of this office to seek recovery of costs incurred by the City from the owner of the property responsible for such stoppages.

210 E. Sunshine

If we may be of assitance or can answer any questions, please do not hesitate to call.

Yours truly,

J. Randall Lyman
Water Pollution Control Inspector III
Surveillance & Enforcement

JRL:js

cc: R. E. Schaefer, Superintendent of Sanitary Services
Bill Foster, Supervisor of Sewer Maintenance
Bob Gregory, Health Department
Don Wiseman, Winn & Scott Architects

210 E. Sunshine