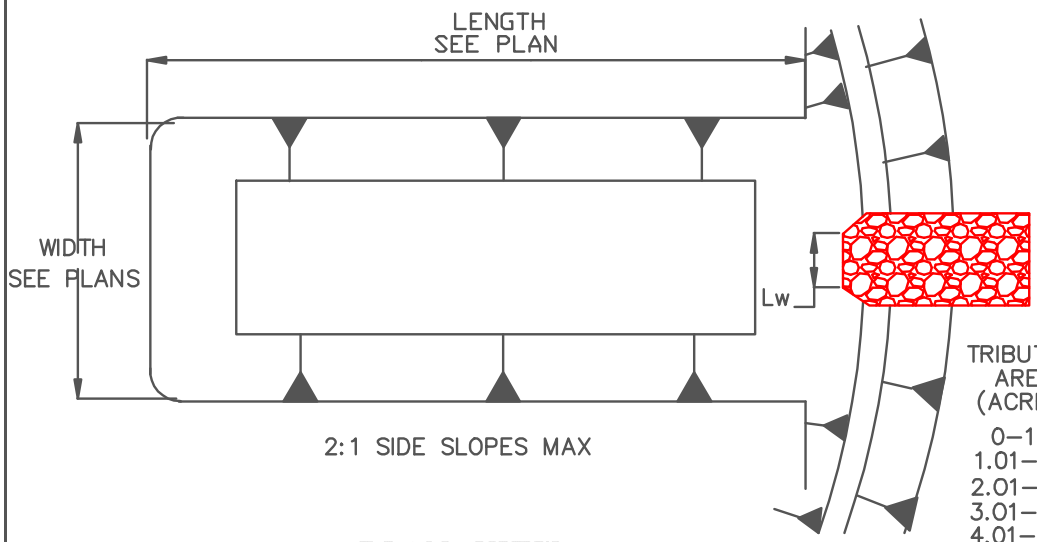

TRIBUTARY AREA (ACRES)	LENGTH OF SPILLWAY WEIR Lw (ft)
0–1.0	4
1.01–2.0	6
2.01–3.0	8
3.01–4.0	10
4.01–5.0	12

PLAN VIEW

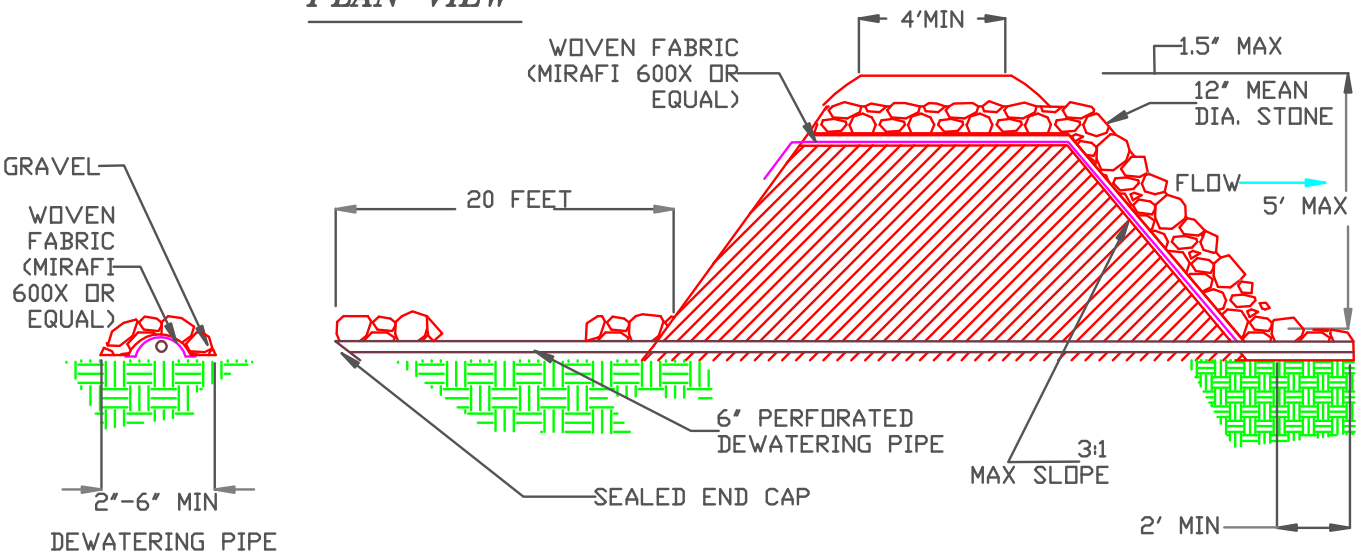

OUTLET PROFILE

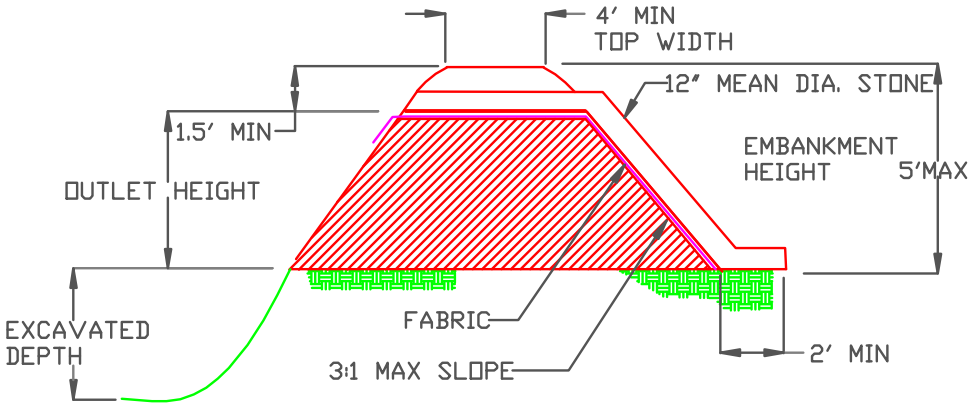

ALTERNATE OUTLET PROFILE

Modified from Chesterfield, Missouri Model BMPs for Land Disturbance

NTS

City of Springfield, Missouri

Department of Public Works
Storm Water Services Division

SEDIMENT TRAP

Figure: SC-6.3
Issued: 10-01-2008
Revised: